ETA-Danmark A/S
Kollegievej 6
DK-2920 Charlottenlund
Tel. +45 72 24 59 00
Fax +45 72 24 59 04
Internet www.etadanmark.dk

Authorised and notified according to Article 10 of the Council Directive 89/106/EEC of 21 December 1988 on the approximation of laws, regulations and administrative provisions of Member States relating to construction products

MEMBER OF EOTA

European Technical Approval ETA-11/0024

This ETA is a modification of the previous ETA with the same number and validity from 2011-03-22 to 2016-03-22

Trade name:	E.u.r.o. Tec “Konstrux”, “Paneltwistec”, “SP“, “AG“, “4K” and “Speedo”
Holder of approval:	E.u.r.o. Tec GmbH Unter dem Hofe 5 D-58099 Hagen Tel. +49 2331 / 6245 - 0 Fax +49 2331 / 6245 - 200 Internet www.e-u-r-o-tec.de
Generic type and use of construction product:	Self-tapping screws for use in timber structures
Valid from: to:	 2016-03-22
Manufacturing plant:	E.u.r.o. Tec GmbH Unter dem Hofe 5 D-58099 Hagen
This European Technical Approval contains:	32 pages including 4 annexes which form an integral part of the document

I LEGAL BASIS AND GENERAL CONDITIONS

1 This European Technical Approval is issued by ETA-Danmark A/S in accordance with:

- Council Directive 89/106/EEC of 21 December 1988 on the approximation of laws, regulations and administrative provisions of Member States relating to construction products[1)], as amended by Council Directive 93/68/EEC of 22 July 1993[2)].

- Bekendtgørelse 559 af 27-06-1994 (afløser bekendtgørelse 480 af 25-06-1991) om ikrafttræden af EF direktiv af 21. december 1988 om indbyrdes tilnærmelse af medlemsstaternes love og administrative bestemmelser om byggevarer.

- Common Procedural Rules for Requesting, Preparing and the Granting of European Technical Approvals set out in the Annex to Commission Decision 94/23/EC[3)].

2 ETA-Danmark A/S is authorized to check whether the provisions of this European Technical Approval are met. Checking may take place in the manufacturing plant. Nevertheless, the responsibility for the conformity of the products to the European Technical Approval and for their fitness for the intended use remains with the holder of the European Technical Approval.

3 This European Technical Approval is not to be transferred to manufacturers or agents of manufacturers other than those indicated on page 1, or manufacturing plants other than those indicated on page 1 of this European Technical Approval.

4 This European Technical Approval may be withdrawn by ETA-Danmark A/S pursuant to Article 5(1) of Council Directive89/106/EEC.

5 Reproduction of this European Technical Approval including transmission by electronic means shall be in full. However, partial reproduction can be made with the written consent of ETA-Danmark A/S. In this case partial reproduction has to be designated as such. Texts and drawings of advertising brochures shall not contradict or misuse the European Technical Approval.

6 This European Technical Approval is issued by ETA-Danmark A/S in English.
This version corresponds fully to the version circulated within EOTA. Translations into other languages have to be designated as such.

1) Official Journal of the European Communities N° L40, 11 Feb 1989, p 12.
2) Official Journal of the European Communities N° L220, 30 Aug 1993, p 1.
3) Official Journal of the European Communities N° L 17, 20 Jan 1994, p 34.

II SPECIAL CONDITIONS OF THE EUROPEAN TECHNICAL APPROVAL

1 Definition of product and intended use

E.u.r.o. Tec "Konstrux", "Paneltwistec", "SP", "AG", "4K" and "Speedo" screws are self-tapping screws to be used in timber structures. E.u.r.o. Tec "Paneltwistec", "SP", "AG", "4K" and "Speedo" screws shall be threaded over a part of the length. E.u.r.o. Tec "Konstrux" screws shall be threaded over the full length. The screws shall be produced from carbon steel wire for nominal diameters of 3,5 mm to 10,0 mm and from stainless steel wire for nominal diameters of 3,5 mm to 8,0 mm. Where corrosion protection is required, the material or coating shall be declared in accordance with the relevant specification given in Annex A of EN 14592.

Geometry and Material
The nominal diameter (outer thread diameter), d, shall not be less than 3,5 mm and shall not be greater than 10,0 mm. The overall length, L, of screws shall not be less than 25 mm and shall not be greater than 600 mm. Other dimensions are given in Annex A.

The ratio of inner thread diameter to outer thread diameter d_i/d ranges from 0,57 to 0,72.

The screws are threaded over a minimum length ℓ_g of 4·d (i.e. $\ell_g \geq 4 \cdot d$).

The lead p (distance between two adjacent thread flanks) ranges from 0,38·d to 0,97·d.

No cracks shall be observed at a bend angle, α, of less than $(45/d^{0,7} + 10)$ degrees.

Intended use
The screws are used for connections in load bearing timber structures between members of solid timber (softwood), glued laminated timber, cross-laminated timber, and laminated veneer lumber, similar glued members, wood-based panels or steel. E.u.r.o. Tec "Konstrux" screws are also used as tensile or compressive reinforcement perpendicular to the grain.

Furthermore E.u.r.o. Tec screws with diameters between 6 mm and 10 mm may also be used for the fixing of thermal insulation on rafters.

Steel plates and wood-based panels except solid wood panels and cross laminated timber shall only be located on the side of the screw head. The following wood-based panels may be used:

- Plywood according to EN 636 or European Technical Approval
- Particleboard according to EN 312 or European Technical Approval
- Oriented Strand Board, Type OSB/3 and OSB/4 according to EN 300 or European Technical Approval
- Fibreboard according to EN 622-2 and 622-3 or European Technical Approval (minimum density 650 kg/m³)
- Cement bonded particleboard according to European Technical Approval
- Solid wood panels according to EN 13353 and EN 13986, and cross laminated timber according to European Technical Approval
- Laminated Veneer Lumber according to EN 14374 or European Technical Approval
- Engineered wood products according to European Technical Approval

The screws shall be driven into the wood without pre-drilling or after pre-drilling with a diameter not larger than the inner thread diameter for the length of the threaded part and with a maximum of the smooth shank diameter for the length of the smooth shank.

The screws are intended to be used in timber connections for which requirements for mechanical resistance and stability and safety in use in the sense of the Essential Requirements 1 and 4 of Council Directive 89/106/EEC shall be fulfilled.

The design of the connections shall be based on the characteristic load-carrying capacities of the screws. The design capacities shall be derived from the characteristic capacities in accordance with Eurocode 5 or an appropriate national code. Regarding environmental conditions, national provisions at the building site shall apply.

The screws are intended for use for connections subject to static or quasi static loading.

The zinc-coated screws are for use in timber structures subject to the dry, internal conditions defined by the service classes 1 and 2 of EN 1995-1-1:2008 (Eurocode 5).

The screws made of stainless steel meet the requirements of Eurocode 5 (EN 1995-1-1:2008), for use in structures subject to the wet conditions defined as service class 3.

Assumed working life
The assumed intended working life of the screws for the intended use is 50 years, provided that they are subject to appropriate use and maintenance.

The information on the working life should not be regarded as a guarantee provided by the manufacturer or the approval body issuing the ETA. An "assumed intended working life" means that it is expected that, when this working life has elapsed, the real working life may be, in normal use conditions, considerably longer without major degradation affecting the essential requirements.

2 Characteristics of product and assessment

	Characteristic	Assessment of characteristic
2.1	**Mechanical resistance and stability*)**	
2.1.1	Tensile strength	Characteristic value $f_{tens,k}$:
	Screws made of carbon steel or martensitic stainless steel 1.4006	Screw d = 3,5 mm: 3,8 kN Screw d = 4,0 mm: 5,0 kN Screw d = 4,5 mm: 6,4 kN Screw d = 5,0 mm: 7,9 kN Screw d = 6,0 mm: 11 kN Screw d = 6,5 mm: 13 kN Screw d = 8,0 mm: 20 kN Screw d = 10,0 mm: 28 kN
	Screws made of stainless steel 1.4401 or 1.4567	Screw d = 3,5 mm: 2,1 kN Screw d = 4,0 mm: 2,8 kN Screw d = 4,5 mm: 3,5 kN Screw d = 5,0 mm: 4,3 kN Screw d = 6,0 mm: 6,2 kN Screw d = 6,5 mm: 7,3 kN Screw d = 8,0 mm: 11 kN
2.1.2	Insertion moment	Ratio of the characteristic torsional strength to the mean insertion moment: $f_{tor,k} / R_{tor,mean} \geq 1,5$
2.1.3	Torsional strength	Characteristic value $f_{tor,k}$:
	Screws made of carbon steel or martensitic stainless steel 1.4006	Screw d = 3,5 mm: 2,0 Nm Screw d = 4,0 mm: 3,0 Nm Screw d = 4,5 mm: 4,2 Nm Screw d = 5,0 mm: 5,6 Nm Screw d = 6,0 mm: 9,5 Nm Screw d = 6,5 mm: 12 Nm Screw d = 8,0 mm: 22 Nm Screw d = 10,0 mm: 40 Nm
	Screws made of stainless steel 1.4401 or 1.4567	Screw d = 3,5 mm: 1,2 Nm Screw d = 4,0 mm: 1,8 Nm Screw d = 4,5 mm: 2,5 Nm Screw d = 5,0 mm: 3,4 Nm Screw d = 6,0 mm: 5,7 Nm Screw d = 6,5 mm: 7,2 Nm Screw d = 8,0 mm: 13 Nm
2.2	**Safety in case of fire**	
2.2.1	Reaction to fire	The screws are made from steel classified as **Euroclass A1** in accordance with EN 1350-1 and EC decision 96/603/EC, amended by EC Decision 2000/605/EC

Characteristic		Assessment of characteristic
2.3	**Hygiene, health and the environment**	
2.3.1	Influence on air quality	No dangerous materials *)
2.4	**Safety in use**	Not relevant
2.5	**Protection against noise**	Not relevant
2.6	**Energy economy and heat retention**	Not relevant
2.7	**Related aspects of serviceability**	
2.7.1	Durability	The screws have been assessed as having satisfactory durability and serviceability when used in timber structures using the timber species described in Eurocode 5 and subject to the conditions defined by service classes 1. 2 and 3
2.7.2	Serviceability	
2.7.3	Identification	See Annex A

*) See page 6

**) In accordance with http://europa.eu.int-/comm/enterprise/construction/internal/dangsub/dangmain.htm In addition to the specific clauses relating to dangerous substances contained in this European Technical Approval, there may be other requirements applicable to the products falling within its scope (e.g. transposed European legislation and national laws, regulations and administrative provisions). In order to meet the provisions of the EU Construction Products Directive, these requirements need also to be complied with, when and where they apply.

2.1 Mechanical resistance and stability

The load-carrying capacities for E.u.r.o. Tec screws are applicable to the wood-based materials mentioned in paragraph 1 even though the term timber has been used in the following.

The characteristic lateral load-carrying capacities and the characteristic axial withdrawal capacities of E.u.r.o. Tec screws should be used for designs in accordance with Eurocode 5 or an appropriate national code.

Pointside penetration length must be $\ell_{ef} \geq 4 \cdot d$, where d is the outer thread diameter of the screw. For the fixing of rafters, point side penetration must be at least 40 mm, $\ell_{ef} \geq 40$ mm.

European Technical Approvals for structural members or wood-based panels must be considered where applicable.

Lateral load-carrying capacity
The characteristic lateral load-carrying capacity of E.u.r.o. Tec screws shall be calculated according to EN 1995-1-1:2008 (Eurocode 5) using the outer thread diameter d as the nominal diameter of the screw. The contribution from the rope effect may be considered.

The characteristic yield moment shall be calculated from:

E.u.r.o. Tec screws for 3,5 mm $\leq$ d $\leq$ 10,0 mm made of carbon steel or martensitic stainless steel 1.4006:
$M_{y,k} = 0{,}15 \cdot 600 \cdot d^{2,6}$ [Nmm]

E.u.r.o. Tec screws for 3,5 mm $\leq$ d $\leq$ 8,0 mm made of stainless steel 1.4401 or 1.4567:
$M_{y,k} = 0{,}15 \cdot 320 \cdot d^{2,6}$ [Nmm]

where
d outer thread diameter [mm]

Axial withdrawal capacity
The characteristic axial withdrawal capacity of E.u.r.o. Tec screws in solid timber (softwood), glued laminated timber or cross-laminated timber members at an angle of 30° $\leq \alpha \leq$ 90° to the grain shall be calculated according to EN 1995-1-1:2008 from:

$$F_{ax,\alpha,Rk} = \frac{n_{ef} \cdot f_{ax,k} \cdot d \cdot \ell_{ef}}{1{,}2 \cdot \cos^2\alpha + \sin^2\alpha} \cdot \left(\frac{\rho_k}{350}\right)^{0,8} \quad [N]$$

Where
$F_{ax,\alpha,RK}$ characteristic withdrawal capacity of the screw at an angle α to the grain [N]
n_{ef} effective number of screws according to EN 1995-1-1:2008
$f_{ax,k}$ Characteristic withdrawal parameter
Screw with drill tip: $f_{ax,k}$ = 9,0 N/mm²
Screws without drill tip:
Screw ∅ 3,5 mm: $f_{ax,k}$ = 13,3 N/mm²
Screw ∅ 4,0 mm: $f_{ax,k}$ = 12,9 N/mm²
Screw ∅ 4,5 mm: $f_{ax,k}$ = 12,5 N/mm²
Screw ∅ 5,0 mm: $f_{ax,k}$ = 12,1 N/mm²
Screw ∅ 6,0 mm: $f_{ax,k}$ = 11,4 N/mm²
Screw ∅ 6,5 mm: $f_{ax,k}$ = 11,4 N/mm²
Screw ∅ 8,0 mm: $f_{ax,k}$ = 11,1 N/mm²
Screw ∅ 10,0 mm: $f_{ax,k}$ = 10,8 N/mm²
d outer thread diameter [mm]
ℓ_{ef} pointside penetration length of the threaded part according to EN 1995-1-1:2008 [mm]
α angle between grain and screw axis ($\alpha \geq 30°$)
ρ_k characteristic density [kg/m³]

The axial withdrawal capacity is limited by the head pull-through capacity and the tensile or compressive capacity of the screw.

Head pull-through capacity
The characteristic head pull-through capacity of E.u.r.o. Tec screws shall be calculated according to EN 1995-1-1:2008 from:

$$F_{ax,\alpha,Rk} = n_{ef} \cdot f_{head,k} \cdot d_h^2 \cdot \left(\frac{\rho_k}{350}\right)^{0,8} \quad [N]$$

where:
$F_{ax,\alpha,RK}$ characteristic head pull-through capacity of the connection at an angle $\alpha \geq 30°$ to the grain [N]
n_{ef} effective number of screws according to EN 1995-1-1:2008
$f_{head,k}$ characteristic head pull-through parameter [N/mm²]
d_h diameter of the screw head [mm]
ρ_k characteristic density [kg/m³], for wood-based panels ρ_k = 380 kg/m³

Characteristic head pull-through parameter for E.u.r.o. Tec "SP" screws in connections with timber and in connections with wood-based panels with thicknesses above 20 mm:
$f_{head,k}$ = 10,0 N/mm²

Characteristic head pull-through parameter for E.u.r.o. Tec "Konstrux", "Paneltwistec", "AG", "4K" and "Speedo" screws in connections with timber and in connections with wood-based panels with thicknesses above 20 mm:
$f_{head,k}$ = 12,0 N/mm²

Characteristic head pull-through parameter for screws in connections with wood-based panels with thicknesses between 12 mm and 20 mm:
$f_{head,k}$ = 8 N/mm²

Screws in connections with wood-based panels with a thickness below 12 mm (minimum thickness of the wood based panels of 1,2·d with d as outer thread diameter):
$f_{head,k}$ = 8 N/mm²
limited to $F_{ax,Rk}$ = 400 N

The head diameter d_h shall be greater than $1{,}8 \cdot d_s$, where d_s is the smooth shank or the wire diameter. Otherwise the

characteristic head pull-through capacity $F_{ax,\alpha,Rk} = 0$.

The minimum thickness of wood-based panels according to the clause 2.1 must be observed.

In steel-to-timber connections the head pull-through capacity may be disregarded.

Tensile capacity
The characteristic tensile strength $f_{tens,k}$ of E.u.r.o. Tec screws made of carbon steel or martensitic stainless steel 1.4006 is:

Screw d = 3,5 mm:	3,8 kN
Screw d = 4,0 mm:	5,0 kN
Screw d = 4,5 mm:	6,4 kN
Screw d = 5,0 mm:	7,9 kN
Screw d = 6,0 mm:	11 kN
Screw d = 6,5 mm:	13 kN
Screw d = 8,0 mm:	20 kN
Screw d = 10,0 mm:	28 kN

The characteristic tensile strength $f_{tens,k}$ of E.u.r.o. Tec screws made of stainless steel 1.4401 or 1.4567 is:

Screw d = 3,5 mm:	2,1 kN
Screw d = 4,0 mm:	2,8 kN
Screw d = 4,5 mm:	3,5 kN
Screw d = 5,0 mm:	4,3 kN
Screw d = 6,0 mm:	6,2 kN
Screw d = 6,5 mm:	7,3 kN
Screw d = 8,0 mm:	11 kN

For screws used in combination with steel plates, the tear-off capacity of the screw head should be greater than the tensile strength of the screw.

Compressive capacity
The characteristic buckling capacity $R_{ki,k}$ of E.u.r.o. Tec "Konstrux" screws embedded in timber shall be calculated from:

$$F_{ki,Rk} = \kappa_c \cdot N_{pl,k} \qquad [N]$$

where

$$\kappa_c = \begin{cases} 1 & \text{for } \bar{\lambda}_k \le 0,2 \\ \dfrac{1}{k + \sqrt{k^2 - \bar{\lambda}_k^2}} & \text{for } \bar{\lambda}_k > 0,2 \end{cases}$$

$$k = 0,5 \cdot \left[1 + 0,49 \cdot (\bar{\lambda}_k - 0,2) + \bar{\lambda}_k^2\right]$$

The relative slenderness ratio shall be calculated from:

$$\bar{\lambda}_k = \sqrt{\frac{N_{pl,k}}{N_{ki,k}}}$$

Where

$$N_{pl,k} = \pi \cdot \frac{d_1^2}{4} \cdot f_{y,k} \qquad [N]$$

is the characteristic value for the axial capacity in case of plastic analysis referred to the inner thread cross section.

Characteristic yield strength of screws from carbon steel:
$f_{y,k} = 1000$ [N/mm²]

Characteristic ideal elastic buckling load:

$$N_{ki,k} = \sqrt{c_h \cdot E_S \cdot I_S} \qquad [N]$$

Elastic foundation of the screw:

$$c_h = (0,19 + 0,012 \cdot d) \cdot \rho_k \cdot \left(\frac{\alpha}{180°} + 0,5\right) \qquad [N/mm^2]$$

Modulus of elasticity:
$E_s = 205000$ [N/mm²]

Second moment of area:

$$I_S = \frac{\pi}{64} \cdot d_1^4 \qquad [mm^4]$$

d_1 = inner thread diameter [mm]

Combined laterally and axially loaded screws
For screwed connections subjected to a combination of axial and lateral load, the following expression should be satisfied:

$$\left(\frac{F_{ax,Ed}}{F_{ax,Rd}}\right)^2 + \left(\frac{F_{la,Ed}}{F_{la,Rd}}\right)^2 \le 1$$

where

$F_{ax,Ed}$	axial design load of the screw
$F_{la,Ed}$	lateral design load of the screw
$F_{ax,Rd}$	design load-carrying capacity of an axially loaded screw
$F_{la,Rd}$	design load-carrying capacity of a laterally loaded screw

Mechanically jointed beams
"Konstrux" screws with a full thread may be used for connections in structural members which are composed of several parts in mechanically jointed beams or columns.

The axial slip modulus K_{ser} of a screw with a full thread for the serviceability limit state should be taken independent of angle α to the grain as:

$$C = K_{ser} = 780 \cdot d^{0,2} \cdot \ell_{ef}^{0,4} \qquad [N/mm]$$

Where

d	outer thread diameter [mm]
ℓ_{ef}	penetration length in the structural member [mm] (see Annex B)

Compression reinforcement
„Konstrux" screws with a full thread may be used for reinforcement of timber members with compression

stresses at an angle α to the grain of $45° < \alpha < 90°$. The compression force must be evenly distributed over all screws.

The characteristic load-carrying capacity for a contact area with screws with a full thread at an angle α to the grain of $45° \leq \alpha \leq 90°$ shall be calculated from:

$$F_{90,Rk} = \min \begin{cases} k_{c,90} \cdot B \cdot \ell_{ef,1} \cdot f_{c,90,k} + n \cdot \min\left(F_{ax,Rk}; F_{ki,Rk}\right) \\ B \cdot \ell_{ef,2} \cdot f_{c,90,k} \end{cases}$$

Where

$F_{90,Rk}$ Load-carrying capacity of reinforced contact area [N]

$k_{c,90}$ factor for compression perpendicular to the grain according to EN 1995-1-1

B bearing width [mm]

$\ell_{ef,1}$ effective length of contact area according to EN 1995-1-1 [mm]

$f_{c,90,k}$ characteristic compressive strength perpendicular to the grain [N/mm²]

n number of reinforcement screws, $n = n_0 \cdot n_{90}$

n_0 number of reinforcement screws arranged in a row parallel to the grain

n_{90} number of reinforcement screws arranged in a row perpendicular to the grain

$F_{ax,Rk}$ characteristic axial withdrawal capacity [N]

$F_{ki,Rk}$ characteristic buckling capacity [N]

$\ell_{ef,2}$ effective distribution length in the plane of the screw tips [mm]

$\ell_{ef,2}$ $= \ell_{ef} + (n_0 - 1) \cdot a_1 + \min(\ell_{ef}; a_{1,c})$ for end-bearings [mm]

$\ell_{ef,2}$ $= 2 \cdot \ell_{ef} + (n_0 - 1) \cdot a_1$ for centre-bearings [mm]

ℓ_{ef} point side penetration length [mm]

a_1 spacing parallel to the grain [mm]

$a_{1,c}$ end distance [mm]

Reinforcing screws for compression shall be arranged according to Annex C.

Reinforcing screws for wood-based panels are not covered by this European Technical Approval.

Thermal insulation material on top of rafters

E.u.r.o. Tec screws with an outer thread diameter of at least d = 6 mm may be used for the fixing of thermal insulation material on top of rafters.

The thickness of the insulation shall not exceed 300 mm. The rafter insulation must be placed on top of solid timber or glued laminated timber rafters or cross-laminated timber members and be fixed by battens arranged parallel to the rafters or by wood-based panels on top of the insulation layer. The insulation of vertical facades is also covered by the rules given here.

Screws must be screwed in the rafter through the battens or panels and the insulation without pre-drilling in one sequence.

The angle α between the screw axis and the grain direction of the rafter should be between 30° and 90°.

The rafter consists of solid timber (softwood) according to EN 338, glued laminated timber according to EN 14081, cross-laminated timber, and laminated veneer lumber according to EN 14374 or to European Technical Approval or similar glued members according to European Technical Approval.

The battens must be from solid timber (softwood) according to EN 338:2003-04. The minimum thickness t and the minimum width b of the battens is given as follows:

Screws $d \leq 8{,}0$ mm: $b_{min} = 50$ mm $t_{min} = 30$ mm
Screws d = 10 mm: $b_{min} = 60$ mm $t_{min} = 40$ mm

The insulation must comply with a European Technical Approval.

Friction forces shall not be considered for the design of the characteristic axial capacity of the screws.

The anchorage of wind suction forces as well as the bending stresses of the battens or the boards, respectively, shall be considered in design. Additional screws perpendicular to the grain of the rafter (angle $\alpha = 90°$) may be arranged if necessary.

Screws for the anchorage of rafter insulation shall be arranged according to Annex D.

The maximum screw spacing is $e_S = 1{,}75$ m.

Fixing of battens with parallel inclined screws

Alternatively to the battens, boards with a minimum thickness of 20 mm from plywood according to EN 636, particle board according to EN 312, oriented strand board OSB/3 and OSB/4 according to EN 300 or European Technical Approval and solid wood panels according to EN 13353 or cross laminated timber may be used.

The insulation must have a minimum compressive stress of $\sigma_{10\%} = 0{,}05$ N/mm² at 10 % deformation according to EN 826:1996-05.

The analysis of the fixing of the insulation and battens or boards, respectively, may be carried out using the static model in Annex D. The battens or boards, respectively, must have sufficient strength and stiffness. The maximum design value of the compressive stress between the battens or boards, respectively, and the insulation shall not exceed $1{,}1 \cdot \sigma_{10\%}$.

The characteristic axial capacity of the "Paneltwistec", "SP", "AG", "4K" and "Speedo" screws for rafter or facade insulation shall be calculated from:

$$F_{ax,\alpha,Rk} = \min\left\{\frac{f_{ax,k}\cdot d\cdot \ell_{ef}\cdot k_1\cdot k_2}{1,2\cdot\cos^2\alpha+\sin^2\alpha};\ f_{head,k}\cdot d_h^2\right\}\cdot\left(\frac{\rho_k}{350}\right)^{0,8}\ [N]$$

The characteristic axial capacity of the "Konstrux" or "Paneltwistec Top duo" screws for rafter or facade insulation shall be calculated from:

$$F_{ax,\alpha,Rk} = \min\left\{\begin{array}{c}\dfrac{f_{ax,k}\cdot d\cdot \ell_{ef}\cdot k_1\cdot k_2}{1,2\cdot\cos^2\alpha+\sin^2\alpha}\cdot\left(\dfrac{\rho_k}{350}\right)^{0,8}\\ \max\left\{f_{head,k}\cdot d_h^2;\ \dfrac{f_{ax,k}\cdot d\cdot \ell_{ef,B}\cdot k_1\cdot k_2}{1,2\cdot\cos^2\alpha+\sin^2\alpha}\right\}\cdot\left(\dfrac{\rho_k}{350}\right)^{0,8}\end{array}\right\}$$

Where

$F_{ax,\alpha,RK}$	Characteristic axial capacity of the screw at an angle α to the grain [N]
d	Outer thread diameter [mm]
ℓ_{ef}	Point side penetration length of the threaded part according to EN 1995-1-1:2008 [mm]
$\ell_{ef,B}$	Length of the threaded part in the batten [mm]
α	Angle between grain and screw axis ($\alpha \geq 30°$)
k_1	min {1; $220/t_{HI}$}
k_2	min {1; $\sigma_{10\%}/0,12$}
t_{HI}	Thickness of the thermal insulation [mm]
$\sigma_{10\%}$	Compressive stress of the thermal insulation under 10 % deformation [N/mm²] $\sigma_{10\%} \geq 0,05$ N/mm²
$f_{head,k}$	Characteristic head pull-through parameter [N/mm²]
d_h	Outer diameter of the screw head [mm]
ρ_k	Characteristic density of the batten or rafter, respectively [kg/m³]

Fixing of battens with alternatively inclined screws

The analysis of the fixing of the insulation and battens, respectively, may be carried out using the static model in Annex D. The battens must have sufficient strength and stiffness.

The characteristic axial tensile capacity of the "Konstrux" or "Paneltwistec Top duo" screws for rafter or facade insulation shall be calculated from:

$$F_{ax,\alpha,Rk} = \min\left\{\begin{array}{c}\dfrac{f_{ax,k}\cdot d\cdot \ell_{ef,b}}{1,2\cdot\cos^2\alpha+\sin^2\alpha}\cdot\left(\dfrac{\rho_{b,k}}{350}\right)^{0,8}\\ \dfrac{f_{ax,k}\cdot d\cdot \ell_{ef,r}}{1,2\cdot\cos^2\alpha+\sin^2\alpha}\cdot\left(\dfrac{\rho_{r,k}}{350}\right)^{0,8}\\ f_{tens,k}\end{array}\right\}$$

The characteristic axial compressive capacity of the "Konstrux" or "Paneltwistec Top duo" screws for rafter or facade insulation shall be calculated from:

$$F_{ax,\alpha,Rk} = \min\left\{\begin{array}{c}\dfrac{f_{ax,k}\cdot d\cdot \ell_{ef,b}}{1,2\cdot\cos^2\alpha+\sin^2\alpha}\cdot\left(\dfrac{\rho_{b,k}}{350}\right)^{0,8}\\ \dfrac{f_{ax,k}\cdot d\cdot \ell_{ef,r}}{1,2\cdot\cos^2\alpha+\sin^2\alpha}\cdot\left(\dfrac{\rho_{r,k}}{350}\right)^{0,8}\\ F_{ki,Rk}\end{array}\right\}$$

Where:

$F_{ax,\alpha,RK}$	Characteristic axial capacity of the screw at an angle α to the grain [N]
d	Outer thread diameter [mm]
$\ell_{ef,r}$	Point side penetration length of the threaded part according to EN 1995-1-1:2008 [mm]
$\ell_{ef,b}$	Length of the threaded part in the batten [mm]
α	Angle between grain and screw axis ($\alpha \geq 30°$)
$\rho_{r,k}$	Characteristic density of the rafter [kg/m³]
$\rho_{b,k}$	Characteristic density of the batten [kg/m³]
$f_{tens,k}$	Characteristic tensile strength of screw [N]
$F_{ki,Rk}$	Characteristic compressive capacity of screw depending on free screw length between counter batten and rafter

Free screw length [mm]	Konstrux 6,5 mm	Konstrux 8,0 mm	Konstrux 10,0 mm	PT top duo 8,0 mm
	$F_{ki,Rk}$ [kN]	$F_{ki,Rk}$ [kN]	$F_{ki,Rk}$ [kN]	$F_{ki,Rk}$ [kN]
≤ 120	2,32	4,28	6,76	5,97
140	1,75	3,27	5,21	4,59
160	1,38	2,57	4,12	3,62
180	1,10	2,08	3,33	2,93
200	0,91	1,71	2,75	2,42
220	0,76	1,43	2,31	2,03
240	0,64	1,21	1,96	1,72
260	0,55	1,04	1,69	1,48
280	0,48	0,91	1,47	1,29
300	0,42	0,79	1,29	1,13
320	0,37	0,70	1,14	1,00
340	0,33	0,62	1,01	0,89
360	0,29	0,56	0,91	0,80
380	0,26	0,50	0,82	0,72
400	0,24	0,46	0,74	0,65
420	0,22	0,42	0,68	0,59

2.7 Related aspects of serviceability

2.7.1 Corrosion protection in service class 1, 2 and 3.
The E.u.r.o. Tec “Konstrux”, “Paneltwistec”, “SP“, “AG“, “4K” and “Speedo” screws are produced from carbon wire. Screws made from carbon steel are electrogalvanised and yellow or blue chromate. The mean thickness of the zinc coating is 5µm.
Steel no. 1.4006 is used for screws made from stainless steel hardened.
Steel no. 1.4401, 1.4567 and 1.4578 is used for screws made from stainless steel unhardened.

3 Attestation of Conformity and CE marking

3.1 Attestation of Conformity system

The system of attestation of conformity is 2+ described in Council Directive 89/106/EEC (Construction Products Directive) Annex III.

a) Tasks for the manufacturer:

(1) Factory production control,
(2) Initial type testing of the product,

b) Tasks for the notified body:

(1) Initial inspection of the factory and the factory production control,
(2) Continuous surveillance

3.2 Responsibilities

3.2.1 Tasks of the manufacturer

3.2.1.1 Factory production control

The manufacturer has a factory production control system in the plant and exercises permanent internal control of production. All the elements, requirements and provisions adopted by the manufacturer are documented in a systematic manner in the form of written policies and procedures. This production control system ensures that the product is in conformity with the European Technical Approval.

The manufacturer shall only use raw materials supplied with the relevant inspection documents as laid down in the control plan[1].The incoming raw materials shall be subject to controls and tests by the manufacturer before acceptance. Check of materials shall include control of the inspection documents presented by suppliers (comparison with nominal values) by verifying dimension and determining material properties.

The manufactured components shall be subject to the following checks:

- Raw material specification;
- Dimension of the screws;
- Characteristic tensile strength $f_{tens,k}$;
- Characteristic torsional strength $f_{tor,k}$;
- Characteristic insertion moment $R_{tor,k}$;
- Durability;
- Marking.

The control plan, which is part of the technical documentation of this European Technical Approval, includes details of the extent, nature and frequency of testing and controls to be performed within the factory production control and has been agreed between the approval holder and the approval body issuing the ETA.

The results of factory production control are recorded and evaluated. The records include at least the following information:

- Designation of the product, basic material and components;
- Type of control or testing;
- Date of manufacture of the product and date of testing of the product or basic material and components;
- Result of control and testing and, if appropriate, comparison with requirements;
- Signature of person responsible for factory production control.

The records shall be presented to the approval body issuing the ETA on request. The records shall be presented to ETA Danmark on request.

3.2.1.1 Initial type testing of the product

For initial type testing the results of the tests performed as part of the assessment for the European Technical Approval shall be used unless there are changes in the production line or plant. In such cases the necessary initial type testing has to be agreed between the approval body issuing the ETA and the notified body.

The initial type testing shall be subject to the following checks:

- Raw material specification;
- Dimension of the screws;
- Characteristic yield moment $M_{y,k}$;
- Characteristic withdrawal parameter $f_{ax,k}$;
- Characteristic head pull-through parameter $f_{head,k}$;
- Characteristic tensile strength $f_{tens,k}$;
- Characteristic yield strength if relevant;
- Characteristic torsional strength $f_{tor,k}$;
- Characteristic insertion moment $R_{tor,k}$;
- Durability.

3.2.2. Tasks of notified bodies

3.2.2.1 Initial inspection of the factory and the factory production control

The approved body should ascertain that, in accordance with the control plan, the factory, in particular the staff and equipment, and the factory production control, are suitable

to ensure a continuous and orderly manufacturing of the screws with the specifications given in part 2.

3.2.2.2 Continuous surveillance

The approved body shall visit the factory at least twice a year for routine inspections. It shall be verified that the system of factory production control and the specified manufacturing processes are maintained, taking account of the control plan.

The results of product certification and continuous surveillance shall be made available on demand by the certification body to ETA Danmark. Where the provisions of the European Technical Approval and the control plan are no longer fulfilled, the certificate of conformity shall be withdrawn by the approved body.

3.3 CE marking

The CE marking shall be affixed on each packaging of screws. The initials "CE" shall be followed by the identification number of the notified body and shall be accompanied by the following information:

- Name or identifying mark of the manufacturer
- The last two digits of the year in which the marking was affixed
- Number of the European Technical Approval
- Name of product
- Outer thread diameter and length of the self-tapping screws
- Type and mean thickness of the corrosion protection
- Number of the EC Certificate of Conformity

4 Assumptions under which the fitness of the product for the intended use was favourably assessed

4.1 Manufacturing

The screws are manufactured in accordance with the provisions of the European Technical Approval using the automated manufacturing process as identified during the inspection of the plant by the approval body issuing the ETA and the approved body and laid down in the technical documentation.

4.2 Installation

4.2.1 The installation shall be carried out in accordance with Eurocode 5 or an appropriate national code unless otherwise is defined in the following. Instructions from E.u.r.o. Tec GmbH should be considered for installation.

4.2.2 The screws are used for connections in load bearing timber structures between members of solid timber (softwood), glued laminated timber, cross-laminated timber, and laminated veneer lumber, similar glued members, wood-based panels or steel members.

The screws may be used for connections in load bearing timber structures with structural members according to an associated European Technical Approval, if according to the associated European Technical Approval of the structural member a connection in load bearing timber structures with screws according to a European Technical Approval is allowed.

E.u.r.o. Tec fully threaded „Konstrux" screws are also used as tensile or compressive reinforcement perpendicular to the grain.

Furthermore the screws with diameters of at least 6 mm may also be used for the fixing of insulation on top of rafters.

A minimum of two screws should be used for connections in load bearing timber structures.

The minimum penetration depth in structural members made of solid, glued or cross-laminated timber is 4·d.

Wood-based panels and steel plates should only be arranged on the side of the screw head. The minimum thickness of wood-based panels should be 1,2·d. Furthermore the minimum thickness for following wood-based panels should be:

- Plywood, Fibreboards: 6 mm
- Particleboards, OSB, Cement Particleboards: 8 mm
- Solid wood panels: 12 mm

For structural members according to European Technical Approvals the terms of the European Technical Approvals must be considered.

If screws with an outer thread diameter $d \geq 8$ mm are used in load bearing timber structures, the structural solid or glued laminated timber, laminated veneer lumber and similar glued members must be from spruce, pine or fir. This does not apply for screws in pre-drilled holes or for screws with drill tips.

The minimum angle between the screw axis and the grain direction is $\alpha = 30°$.

4.2.3 The screws shall be driven into the wood with or without pre-drilling. The maximum pre-drilling diameter is the inner thread diameter for the length of the threaded part and the smooth shank diameter for the depth of the smooth shank. The hole diameter in steel members must be predrilled with a suitable diameter.

Only the equipment prescribed by E.u.r.o. Tec GmbH shall be used for driving the screws.

In connections with screws with countersunk head according to Annex A the head must be flush with the surface of the connected structural member. A deeper countersink is not allowed.

4.2.4 For structural timber members, minimum spacing and distances for screws in predrilled holes are given in EN 1995-1-1:2008 (Eurocode 5) clause 8.3.1.2 and table 8.2 as for nails in predrilled holes. Here, the outer thread diameter d must be considered.

For screws in non-predrilled holes, minimum spacing and distances are given in EN 1995-1-1:2004 (Eurocode 5) clause 8.3.1.2 and table 8.2 as for nails in non-predrilled holes.

For Douglas fir members minimum spacing and distances parallel to the grain shall be increased by 50%.

Minimum distances from loaded or unloaded ends must be 15·d for screws in non-predrilled holes with outer thread diameter $d \geq 8$ mm and timber thickness $t < 5 \cdot d$.

Minimum distances from the unloaded edge perpendicular to the grain may be reduced to 3·d also for timber thickness $t < 5 \cdot d$, if the spacing parallel to the grain and the end distance is at least 25·d.

Minimum distances and spacing for exclusively axially loaded screws in non-predrilled holes in members with a minimum thickness $t = 10 \cdot d$ and a minimum width of 8·d or 60 mm, whichever is the greater, may be taken as:

Spacing a_1 parallel to the grain	$a_1 = 5 \cdot d$
Spacing a_2 perpendicular to the grain	$a_2 = 5 \cdot d$

Distance $a_{1,c}$ from centre of the screw-part in timber to the end grain	$a_{1,c} = 10 \cdot d$
Distance $a_{2,c}$ from centre of the screw-part in timber to the edge	$a_{2,c} = 4 \cdot d$

Spacing a_2 perpendicular to the grain may be reduced from 5·d to 2,5·d, if the condition $a_1 \cdot a_2 \geq 25 \cdot d^2$ is fulfilled.

Minimum distances and spacing for exclusively axially loaded screws in predrilled holes or for “Konstrux” screws with drill tip in non-predrilled holes in members with a minimum thickness t = 10·d and a minimum width of 8·d or 60 mm, whichever is the greater, may be taken as:

Spacing a_1 parallel to the grain	$a_1 = 5 \cdot d$
Spacing a_2 perpendicular to the grain	$a_2 = 5 \cdot d$
Distance $a_{1,c}$ from centre of the screw-part in timber to the end grain	$a_{1,c} = 5 \cdot d$
Distance $a_{2,c}$ from centre of the screw-part in timber to the edge	$a_{2,c} = 3 \cdot d$

Spacing a_2 perpendicular to the grain may be reduced from 5·d to 2,5·d, if the condition $a_1 \cdot a_2 \geq 25 \cdot d^2$ is fulfilled.

For a crossed screw couple the minimum spacing between the crossing screws is 1,5·d.

Minimum thickness for structural members is t = 24 mm for screws with outer thread diameter d < 8 mm, t = 30 mm for screws with outer thread diameter d = 8 mm, and t = 40 mm for screws with outer thread diameter d = 10 mm.

4.3 Maintenance and repair

Maintenance is not required during the assumed intended working life. Should repair prove necessary, it is normal to replace the screws

Thomas Bruun
Manager, ETA-Danmark

Annex A
KonstruX
carbon steel: SAE 10B21

nominal size		Ø6,5	Ø8,0	Ø10,0
d	min	6,20	7,60	9,60
	max	6,80	8,30	10,20
di	min	4,20	5,00	5,70
	max	4,80	5,40	6,30
dh	min	7,70	9,50	12,50
	max	8,30	10,50	13,50
hh	min	5,20	6,60	6,00
	max	5,70	7,40	7,00
p	min	4,41	4,68	5,04
	max	5,39	5,72	6,16
dt	min	4,70	5,80	6,30
	max	5,10	6,20	6,70
ℓt	min	6,00	7,00	11,00
	max	8,00	9,00	12,00
dh2	min	11,50	14,00	15,50
	max	12,00	15,00	16,50
hh2	min	5,40	7,00	7,30
	max	5,90	7,40	7,70
dh3	min	-	21,50	19,50
	max		22,50	20,50
dm	min	-	5,40	6,80
	max		5,80	7,20
hm	min	-	4,30	3,80
	max		4,70	4,20
TX	torx size	TX30	TX40	TX50/TX40*
SW	wrench size	-	SW 13	-

All specifications in mm.
* TX40 for countersunk head

L +0/-2,0		
Ø6,5	Ø8,0	Ø10,0
120	155	200
140	195	220
160	220	240
195	245	260
-	295	280
-	330	300
-	375	330
-	400	360
-	-	400
-	-	450
-	-	500
-	-	550
-	-	600

All specifications in mm.

countersunk head

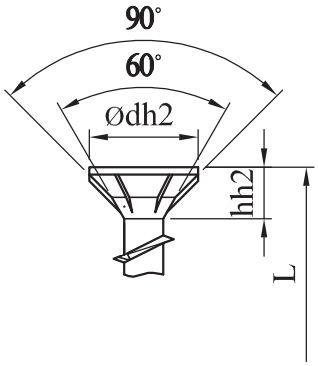

washer head

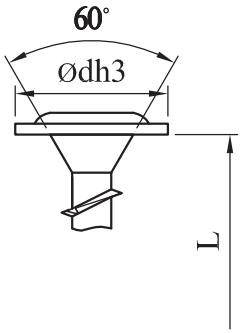

hexagon head

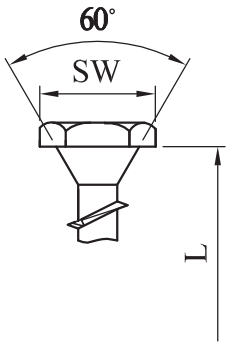

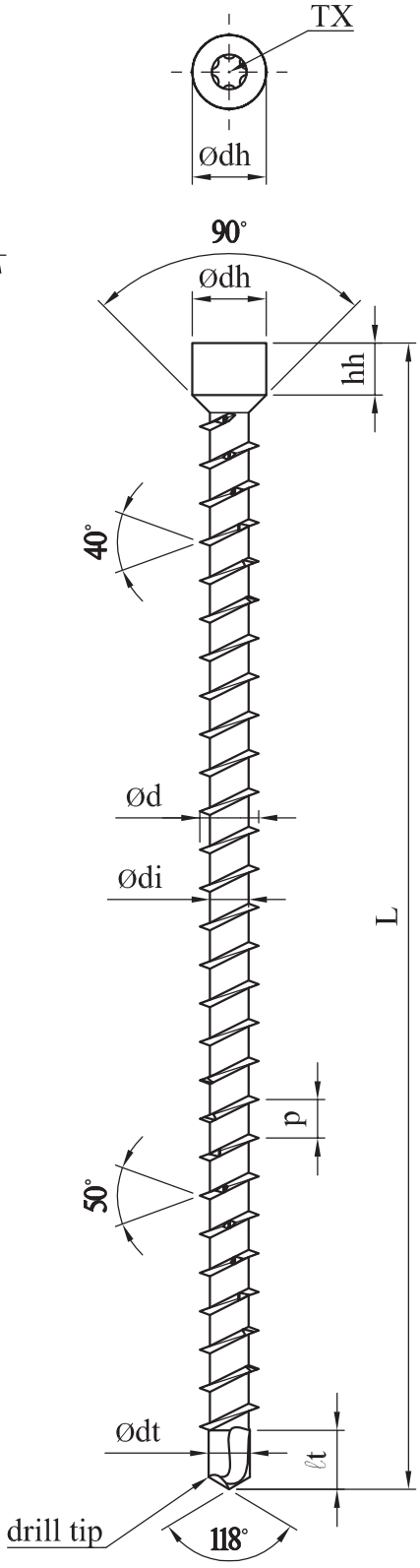

tip type 17M

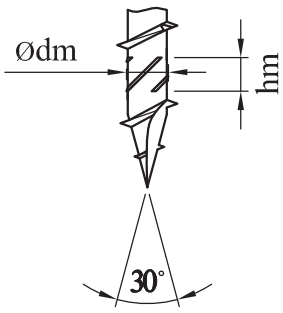

tip type 17

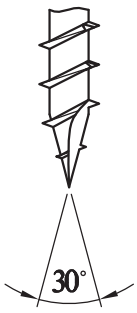

Paneltwistec countersunk head 90°
SP FK countersunk head 90°
carbon steel: SAE 1018, SAE 1022, SAE 10B21
stainless steel hardened: 1.4006

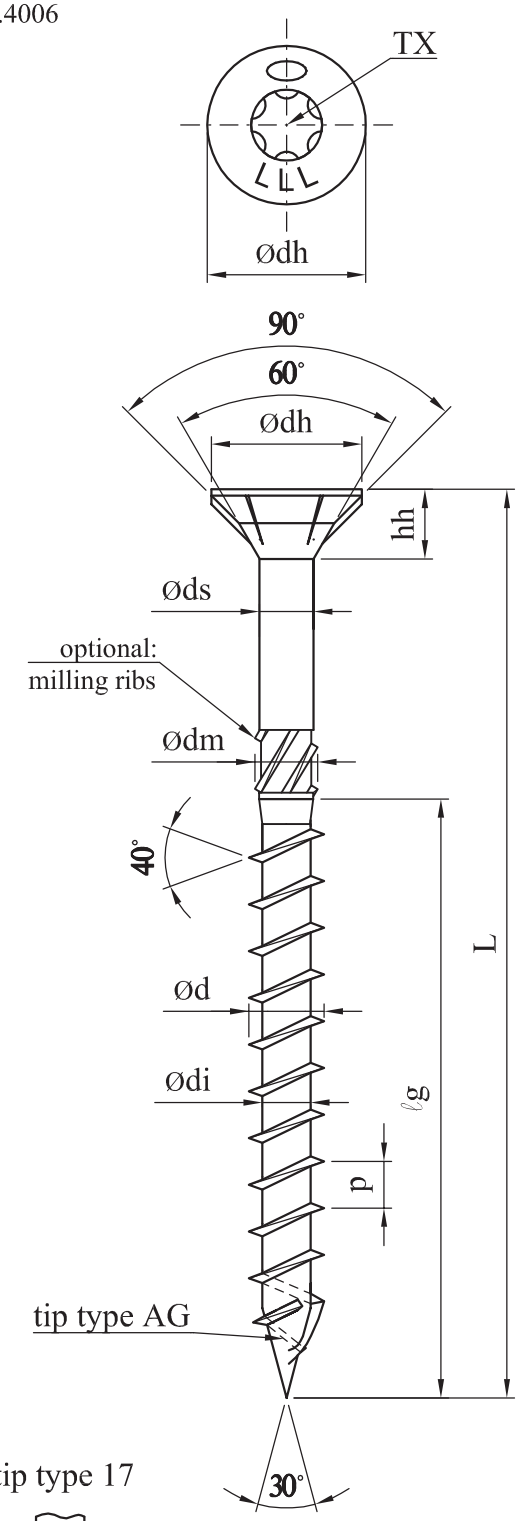

nominal size		Ø3,5	Ø4,0	Ø4,5	Ø5,0	Ø6,0	Ø8,0	Ø10,0
d	min	3,30	3,75	4,25	4,70	5,75	7,60	9,70
	max	3,65	4,05	4,55	5,10	6,15	8,20	10,30
di	min	2,00	2,35	2,60	3,00	3,80	5,10	6,00
	max	2,25	2,65	2,80	3,45	4,20	5,50	6,50
dh	min	6,60	7,50	8,50	9,50	11,50	14,10	17,40
	max	7,00	8,00	9,00	10,00	12,00	14,90	18,20
hh	min	3,25	3,75	4,15	4,55	5,40	6,50	8,20
	max	3,65	4,25	4,65	5,05	5,90	7,50	9,20
p	min	2,02	2,27	2,52	2,79	4,41	5,04	5,94
	max	2,46	2,77	3,08	3,41	5,39	6,16	7,26
ds	min	2,20	2,60	2,80	3,60	4,50	5,70	6,90
	max	2,40	2,80	3,10	3,80	4,50	5,90	7,20
dm	min	2,65	2,85	3,35	3,75	4,80	6,60	7,90
	max	2,85	3,05	3,55	3,95	5,00	6,80	8,10
dc	min	3,30	3,75	5,15	5,75	6,95	7,65	9,60
	max	3,70	4,25	5,65	6,25	7,45	8,35	10,40
hh2	min	3,70	4,20	4,70	5,30	5,60	7,00	8,00
	max	3,90	4,40	4,90	5,50	5,80	7,50	8,50
TX	torx size	TX20	TX20	TX20	TX20	TX30	TX40	TX40

All specifications in mm.

	ℓg +1,0/-1,0						
L +0/-2,0	Ø3,5	Ø4,0	Ø4,5	Ø5,0	Ø6,0	Ø8,0	Ø10,0
25	15	15	-	-	-	-	-
30	18	18	-	-	-	-	-
40	24	24	24	24	-	-	-
45	27	27	27	27	-	-	-
50	30	30	30	30	30	-	-
60	-	36	36	36	36	-	-
70	-	42	42	42	42	-	-
80	-	48	48	48	48	48/50*	48/50*
90	-	-	-	54	54	-	-
100	-	-	-	60	60	80/60*	80/60*
110	-	-	-	66	70	-	-
120	-	-	-	70	70	80/70*	80/70*
130	-	-	-	-	70	-	-
140	-	-	-	-	70	80	80
150	-	-	-	-	70	-	-
160	-	-	-	-	70	80/90*	80/90*
180	-	-	-	-	70	80/100*	80/100*
200	-	-	-	-	70	80/100*	80/100*
+20 mm steps	-	-	-	-	-	80/100*	80/100*
460	-	-	-	-	-	80/100*	80/100*

All specifications in mm.
ℓg for tip type 17 and normal tip/tip type AG*

head type c

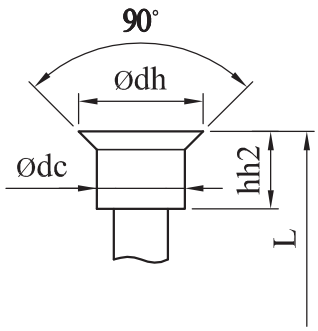

tip type N

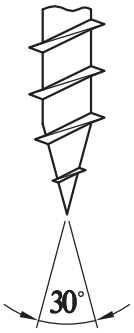

tip type 17

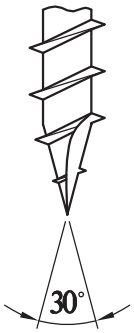

Paneltwistec countersunk head 60°
SP FK countersunk head 60°
carbon steel: SAE 1018, SAE 1022, SAE 10B21
stainless steel hardened: 1.4006

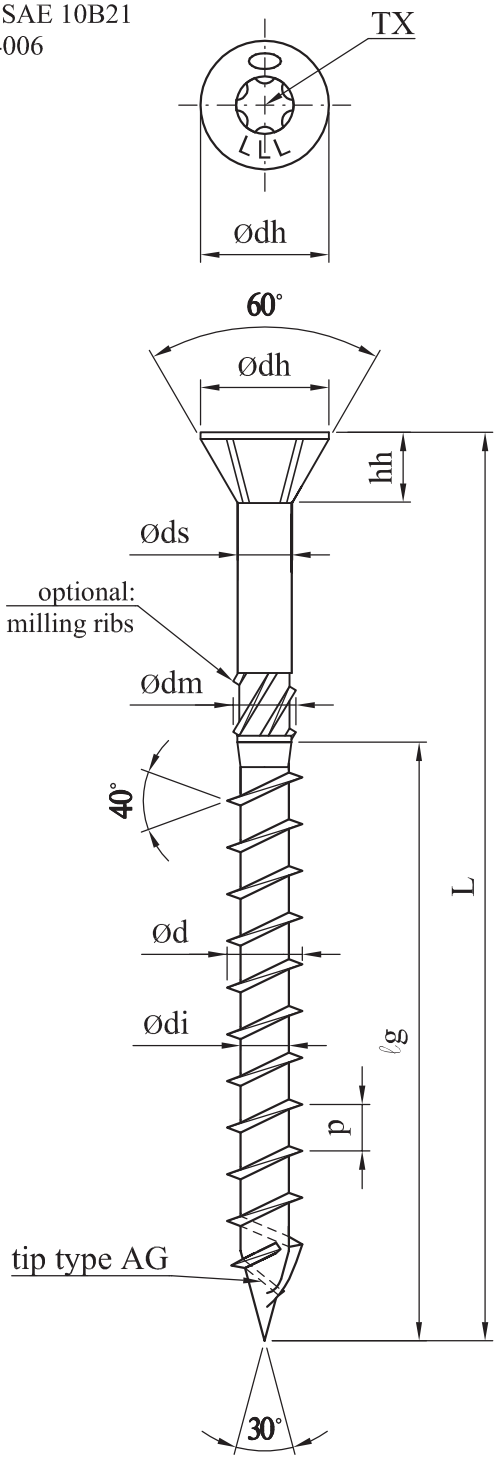

nominal size		Ø3,5	Ø4,0	Ø4,5	Ø5,0	Ø6,0	Ø8,0	Ø10,0
d	min	3,30	3,75	4,25	4,70	5,75	7,60	9,70
	max	3,65	4,05	4,55	5,10	6,15	8,20	10,30
di	min	2,00	2,35	2,60	3,00	3,80	5,10	6,00
	max	2,25	2,65	2,80	3,45	4,20	5,50	6,50
dh	min	4,50	5,50	6,00	6,50	10,00	12,00	15,40
	max	5,50	6,50	8,00	8,00	12,00	14,00	17,40
hh	min	1,75	2,00	2,25	2,50	3,00	n.s.	n.s
	max	2,10	2,50	2,75	3,00	4,00		
p	min	2,02	2,27	2,52	2,79	4,41	5,04	5,94
	max	2,46	2,77	3,08	3,41	5,39	6,16	7,26
ds	min	2,20	2,60	2,80	3,60	4,50	5,70	6,90
	max	2,40	2,80	3,10	3,80	4,50	5,90	7,20
dm	min	2,65	2,85	3,35	3,75	4,80	6,60	7,90
	max	2,85	3,05	3,55	3,95	5,00	6,80	8,10
dt	min	1,90	2,20	2,40	2,80	3,30	5,10	6,00
	max	2,10	2,40	2,60	3,00	3,50	5,50	6,50
ℓt	min	3,30	3,80	4,30	4,80	4,80	5,00	6,00
	max	3,50	4,00	4,50	5,00	5,00	5,20	6,20
dc	min	3,30	3,75	5,15	5,75	6,95	7,65	9,60
	max	3,70	4,25	5,65	6,25	7,45	8,35	10,40
hh2	min	3,70	4,20	4,70	5,30	5,60	6,00	6,50
	max	3,90	4,40	4,90	5,50	5,80	6,30	6,80
TX	torx size	TX20	TX20	TX20	TX20	TX30	TX40	TX40

All specifications in mm.
n.s. - not specified

	ℓg +1,0/-1,0						
L +0/-2,0	Ø3,5	Ø4,0	Ø4,5	Ø5,0	Ø6,0	Ø8,0	Ø10,0
25	15	15	-	-	-	-	-
30	18	18	-	-	-	-	-
40	24	24	24	24	-	-	-
45	27	27	27	27	-	-	-
50	30	30	30	30	30	-	-
60	-	36	36	36	36	-	-
70	-	42	42	42	42	-	-
80	-	48	48	48	48	48/50*	48/50*
90	-	-	-	54	54	-	-
100	-	-	-	60	60	80/60*	80/60*
110	-	-	-	66	70	-	-
120	-	-	-	70	70	80/70*	80/70*
130	-	-	-	-	70	-	-
140	-	-	-	-	70	80	80
150	-	-	-	-	70	-	-
160	-	-	-	-	70	80/90*	80/90*
180	-	-	-	-	70	80/100*	80/100*
200	-	-	-	-	70	80/100*	80/100*
+20 mm steps	-	-	-	-	-	80/100*	80/100*
460	-	-	-	-	-	80/100*	80/100*

All specifications in mm.
ℓg for tip type 17 and normal tip / tip type AG*

head type c

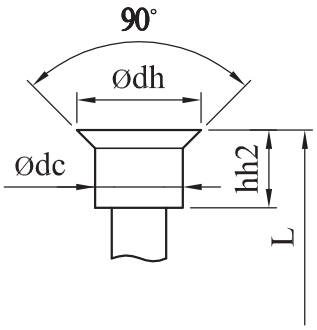

tip type N

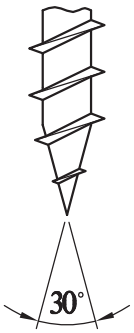

tip type 17

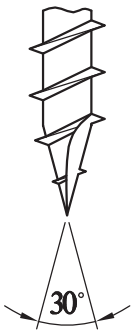

drill tip

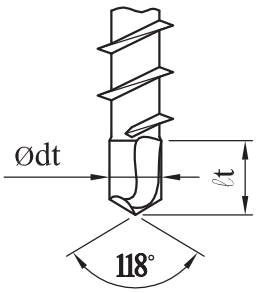

Paneltwistec washer head
carbon steel: SAE 10B21
stainless steel hardened: 1.4006

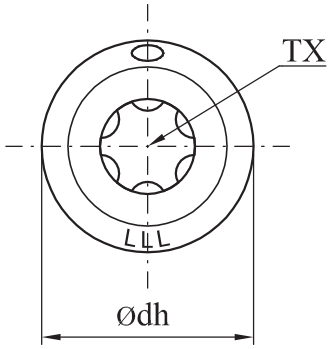

nominal size		Ø4,0	Ø4,5	Ø5,0	Ø6,0	Ø8,0	Ø10,0
d	min	3,75	4,25	4,70	5,75	7,80	9,70
	max	4,05	4,55	5,10	6,15	8,20	10,30
di	min	2,35	2,60	3,00	3,60	5,10	6,00
	max	2,65	2,80	3,45	4,10	5,50	6,50
dh	min	9,50	10,50	11,50	13,50	21,00	24,00
	max	10,50	11,50	12,50	14,50	23,00	26,00
dc	min	4,50	5,20	5,70	6,40	9,50	11,20
	max	5,10	5,80	6,30	7,00	10,50	12,00
p	min	2,27	2,52	2,79	4,41	5,04	5,94
	max	2,77	3,08	3,41	5,39	6,16	7,26
ds	min	2,50	2,80	3,30	3,80	5,70	6,90
	max	2,90	3,20	3,70	4,50	5,90	7,20
dm	min	2,85	3,35	3,75	4,80	6,60	7,90
	max	3,05	3,55	3,95	5,10	6,80	8,10
TX	torx size	TX20	TX20	TX20	TX30	TX40	TX40

All specifications in mm.

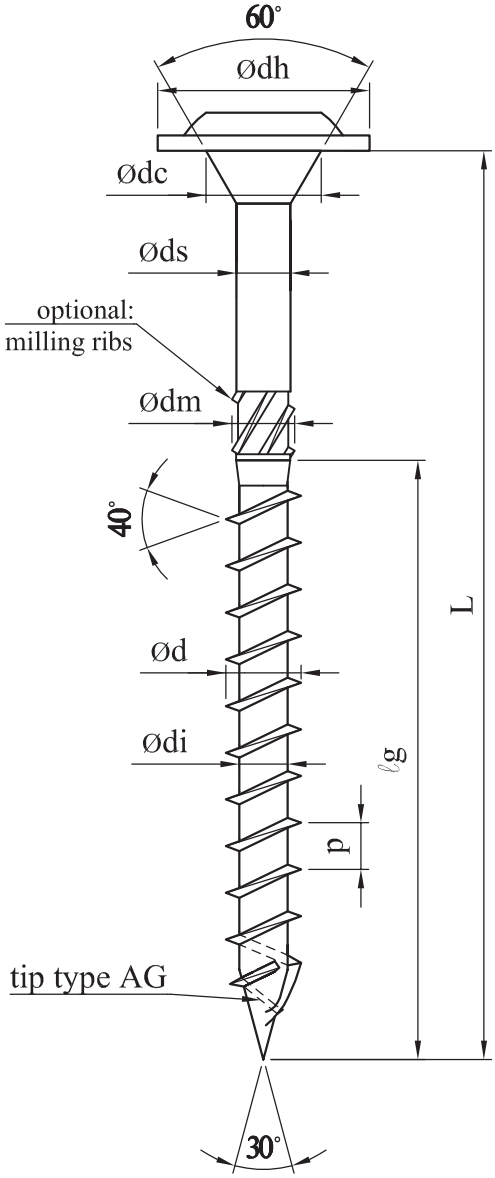

	ℓg +1,0/-1,0					
L +0/-2,0	Ø4,0	Ø4,5	Ø5,0	Ø6,0	Ø8,0	Ø10,0
25	15	-	-	-	-	-
30	18	-	-	-	-	-
40	24	24	24	-	-	-
45	27	27	27	-	-	-
50	30	30	30	30	-	-
60	36	36	36	36	-	-
70	42	42	42	42	-	-
80	48	48	48	48	48/50*	48/50*
90	-	-	54	54	-	-
100	-	-	60	60	80/60*	80/60*
110	-	-	66	70	-	-
120	-	-	70	70	80/70*	80/70*
130	-	-	-	70	-	-
140	-	-	-	70	80	80
150	-	-	-	70	-	-
160	-	-	-	70	80/90*	80/90*
180	-	-	-	70	80/100*	80/100*
200	-	-	-	70	80/100*	80/100*
+20 mm steps	-	-	-	-	80/100*	80/100*
460	-	-	-	-	80/100*	80/100*

All specifications in mm.
ℓg for tip type 17 and normal tip/tip type AG*

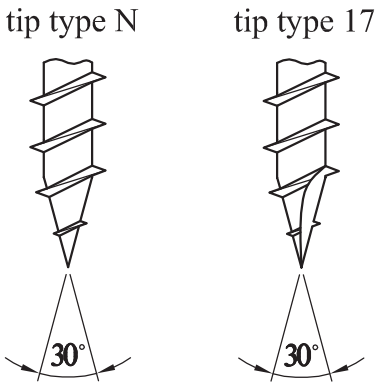

Paneltwistec washer head
stainless steel hardened: 1.4006

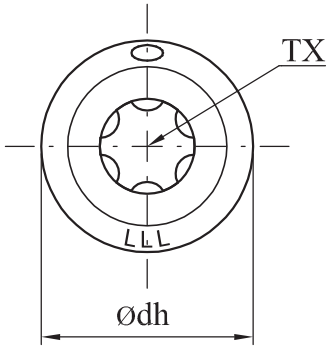

nominal size			Ø8,0	
d	min	-	7,80	-
	max	-	8,20	-
di	min	-	5,10	-
	max	-	5,50	-
dh	min	-	17,50	-
	max	-	18,50	-
dc	min	-	7,70	-
	max	-	8,00	-
p	min	-	4,68	-
	max	-	5,72	-
ds	min	-	5,70	-
	max	-	5,90	-
dm	min	-	6,60	-
	max	-	6,80	-
TX	torx size	-	TX40	-

All specifications in mm.

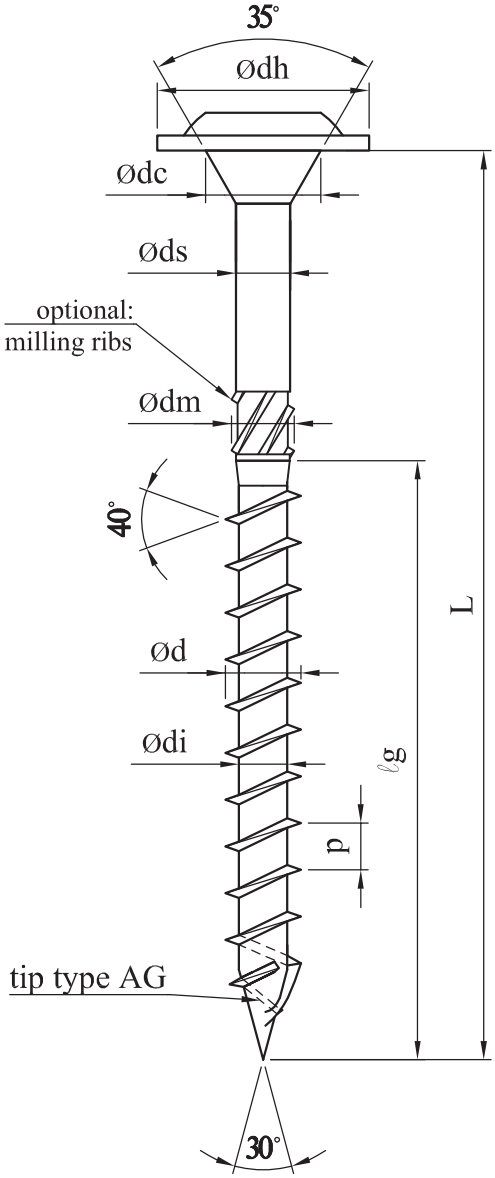

	ℓg +1,0/-1,0		
L +0/-2,0		Ø8,0	
80	-	48/50*	-
100	-	80/60*	-
110	-	-	-
120	-	80/70*	-
130	-	-	-
140	-	80	-
150	-	-	-
160	-	80/90*	-
180	-	80/100*	-
200	-	80/100*	-
+20 mm steps	-	80/100*	-
460	-	80/100*	-

All specifications in mm.
ℓg for tip type 17 and normal tip/tip type AG*

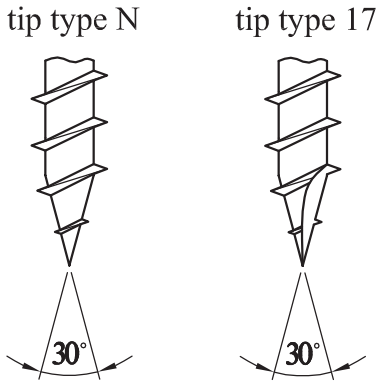

Paneltwistec Topduo
carbon steel: SAE 10B21
stainless steel hardened: 1.4006

nominal size			Ø8,0	
d	min	-	7,70	-
	max	-	8,10	-
di	min	-	5,00	-
	max	-	5,40	-
dh	min	-	15,70	-
	max	-	16,30	-
dc	min	-	7,70	-
	max	-	8,00	-
p	min	-	5,04	-
	max	-	6,16	-
ds	min	-	5,65	-
	max	-	5,80	-
dm	min	-	6,40	-
	max	-	6,60	-
dh2	min	-	14,60	-
	max	-	15,40	-
hh2	min	-	8,20	-
	max	-	9,20	-
TX	torx size	-	TX40	-

All specifications in mm.

L +0/-2,0
225
235
255
275
302
335
365
397
435

All specifications in mm.

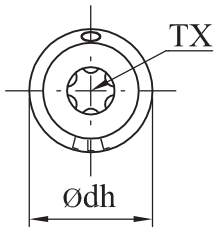

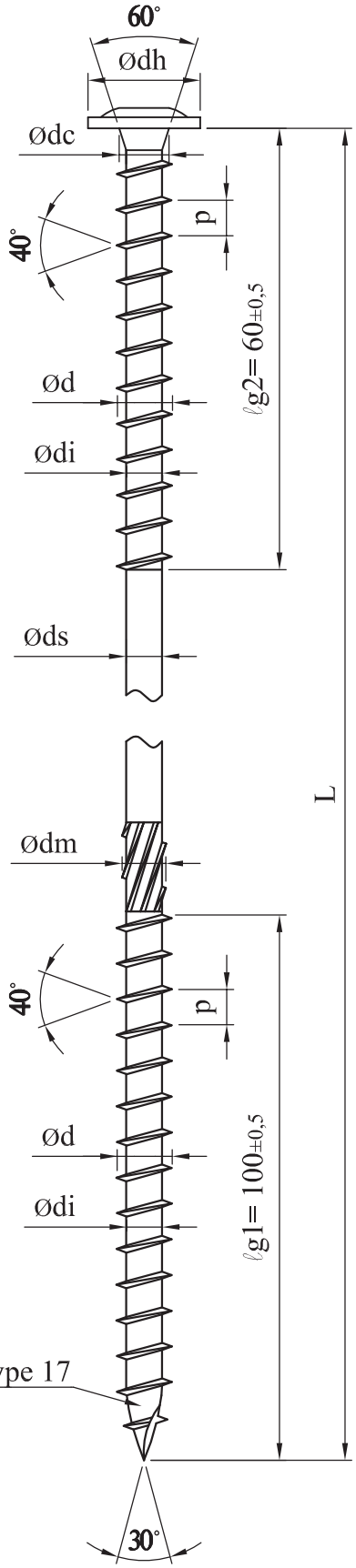

countersunk head

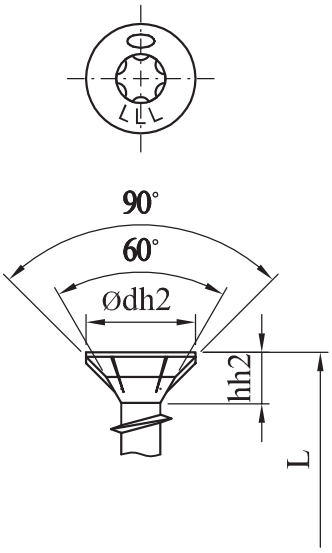

tip type AG

Terrassotec, S-L-SP FK, SP FK
carbon steel: SAE 1018, SAE 1022, SAE 10B21
stainless steel hardened: 1.4006

Terrassotec, S-L-SP FK

nominal size		Ø3,5	Ø4,0	Ø4,5	Ø5,0	Ø6,0
d	min	3,30	3,90	4,30	4,70	5,75
	max	3,65	4,10	4,60	5,10	6,15
di	min	2,00	2,40	2,60	3,00	3,70
	max	2,25	2,60	2,80	3,45	4,15
dh	min	4,50	5,50	6,00	6,70	11,00
	max	5,50	6,50	8,00	8,70	12,00
dc	min	3,40	3,90	5,30	5,80	7,00
	max	3,60	4,10	5,50	6,20	7,40
hh	min	1,75	4,10	4,60	5,20	5,40
	max	2,10	4,40	4,90	5,50	5,80
β	countersink angle	90°	90°	90°	90°	90°
p	min	2,02	2,25	2,52	2,79	3,24
	max	2,46	2,75	3,08	3,41	3,96
ds	min	2,20	2,60	2,80	3,55	4,20
	max	2,40	2,90	3,20	3,80	4,50
dm	min	2,70	3,20	3,70	3,90	4,90
	max	3,10	3,60	4,10	4,10	5,10
TX	torx size	TX10	TX15	TX20	TX25	TX30

SP FK

Ø6,0	Ø8,0	Ø10,0
5,75	7,60	9,70
6,15	8,20	10,30
3,80	5,10	6,00
4,20	5,50	6,50
13,00	17,50	22,00
14,00	19,00	23,00
6,20	9,85	10,50
6,80	10,65	11,50
5,80	7,00	8,10
6,20	7,40	8,50
125°	125°	125°
4,41	5,04	5,94
5,39	6,16	7,26
4,30	5,50	6,70
4,60	5,90	7,15
4,50	6,40	7,50
4,90	6,80	7,90
TX30	TX40	TX40

All specifications in mm.

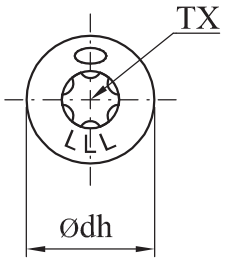

Terrassotec, S-L-SP FK

	ℓg +1,0/-1,0				
L +0/-1,0	Ø3,5	Ø4,0	Ø4,5	Ø5,0	Ø6,0
30	18	18	18	-	-
35	21	21	21	-	-
40	24	24	24	-	-
45	27	27	27	26	26
50	30	30	30	30	30
60	-	35	35	35	35
70	-	40	40	40	40
80	-	50	50	50	50
90	-	55	55	55	55
100	-	60/70*	60	60	60
110	-	70	65	65	60
120	-	70	70	70	60
130	-	70	70	70	70
140	-	70	70	70	70
150	-	-	-	-	70
160	-	-	-	-	70

All specifications in mm.
ℓg for Terrassotec/S-L-SP FK*

SP FK

	ℓg +1,0/-1,0		
L +1,0/-1,0	Ø6,0	Ø8,0	Ø10,0
70	42	50	50
80	48	60	60
90	54	70	70
100	60	80	80
120	70	90	90
140	70	100	100
160	70	100	100
180	70	100	100
200	70	100	100
220	-	100	100
240	-	100	100
260	-	100	100
280	-	100	100
300	-	100	100
320	-	100	100
340	-	100	100
360	-	100	100
380	-	100	100
400	-	100	100
450	-	100	100
500	-	100	100
550	-	-	100
600	-	-	100

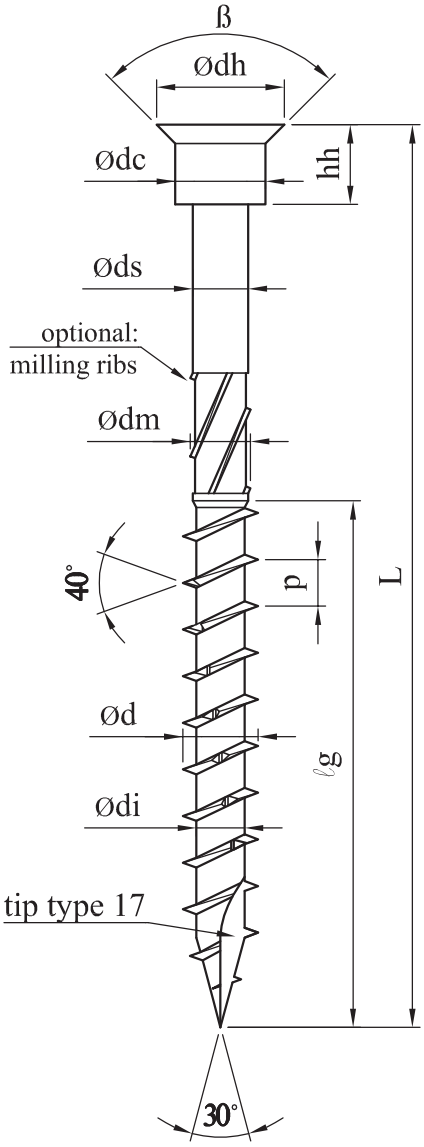

tip type N

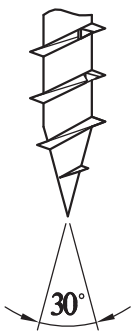

tip type AG

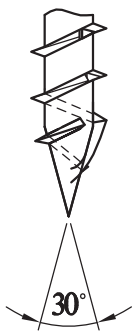

Speedo
carbon steel: SAE 1018, SAE 1022, SAE 10B21

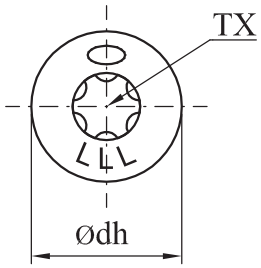

nominal size		Ø3,5	Ø4,0	Ø4,5	Ø5,0	Ø6,0	Ø8,0	Ø10,0
d	min	3,35	3,75	4,25	4,70	5,85	7,60	9,80
	max	3,65	4,15	4,65	5,15	6,15	8,20	10,20
di	min	2,00	2,30	2,55	3,00	3,75	5,20	6,10
	max	2,25	2,65	2,75	3,45	4,00	5,50	6,40
dh	min	6,60	7,50	8,50	9,50	11,50	14,00	17,60
	max	7,00	8,40	9,00	10,00	12,00	15,00	18,40
hh	min	3,25	3,75	4,15	5,30	5,40	6,75	8,40
	max	3,80	4,35	4,65	5,90	5,90	7,25	9,00
p	min	2,02	2,27	2,52	2,79	4,41	5,85	5,58
	max	2,46	2,77	3,08	3,41	5,39	7,15	6,82
ds	min	2,20	2,60	2,80	3,60	4,20	5,60	6,95
	max	2,50	2,85	3,20	3,80	4,30	5,70	7,05
dm	min	2,50	2,90	3,40	3,80	4,40	6,60	7,80
	max	2,80	3,25	3,60	4,00	5,00	6,90	8,10
dm2	min	2,50	2,95	3,20	3,80	4,30	5,95	7,20
	max	2,80	3,25	3,50	4,00	4,50	6,05	7,40
hm2	min	2,40	2,40	2,90	2,90	4,90	5,60	7,00
	max	2,60	2,60	3,10	3,10	5,10	5,80	7,70
dh2	min	-	-	-	-	13,50	20,50	24,00
	max					14,50	22,50	26,00
TX	torx size	TX20	TX20	TX20	TX20	TX30	TX40	TX40

All specifications in mm.

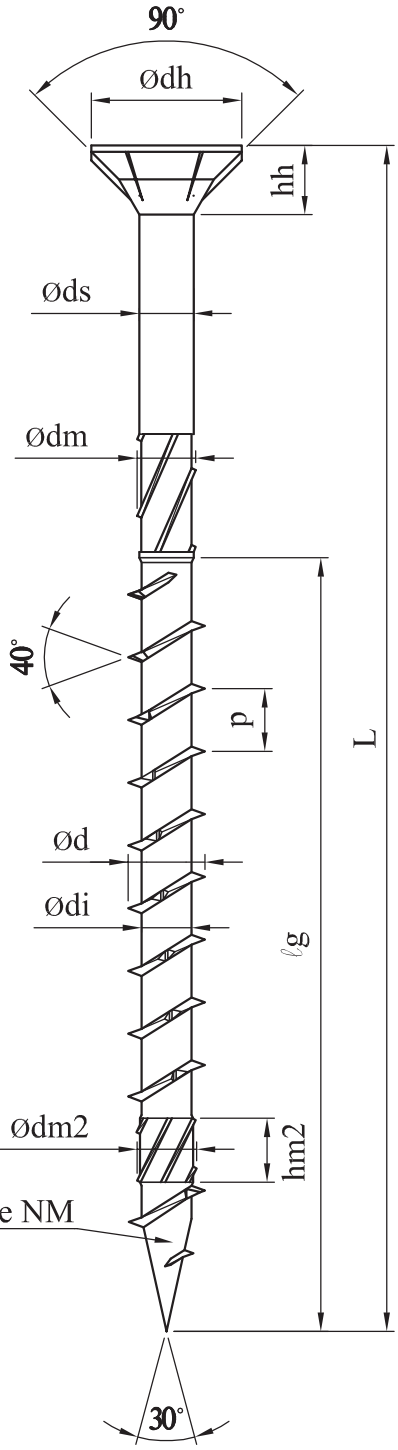

	ℓg +1,0/-1,0						
L +0/-2,0	Ø3,5	Ø4,0	Ø4,5	Ø5,0	Ø6,0	Ø8,0	Ø10,0
30	full	full	full	-	-	-	-
35	21	21	21	-	-	-	-
40	26,5	26,5	26,5	26,5	-	-	-
45	29,5	29,5	29,5	29,5	-	-	-
50	32,5	32,5	32,5	32,5	32,5	-	-
60	-	38,5	38,5	38,5	38,5	-	-
70	-	44,5	44,5	44,5	44,5	-	-
80	-	50,5	50,5	50,5	50,5	52	52
90	-	-	-	62,5	62,5	52	52
100	-	-	-	62,5	62,5	52	60
110	-	-	-	74,5	-	52	60
120	-	-	-	74,5	80	52	87
130	-	-	-	-	80	-	-
140	-	-	-	-	80	100	100
150	-	-	-	-	80	100	100
160	-	-	-	-	80	100	100
180	-	-	-	-	80	100	100
200	-	-	-	-	80	100	100
+20 mm steps	-	-	-	-	-	100	100
400	-	-	-	-	-	100	100

All specifications in mm.

washer head

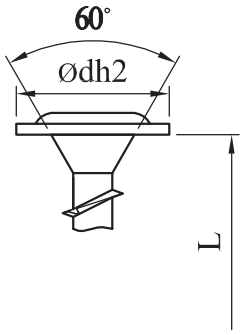

tip type 17M

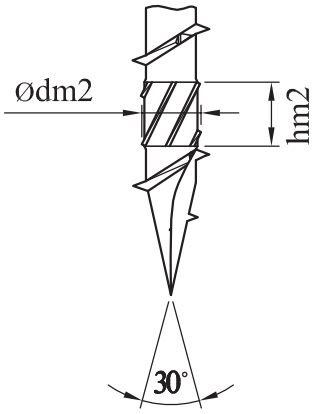

Speedo 4K
carbon steel: SAE 1018, SAE 1022, SAE 10B21

nominal size		Ø3,5	Ø4,0	Ø4,5	Ø5,0	Ø6,0	Ø8,0	Ø10,0
d	min	3,35	3,75	4,25	4,70	5,75	7,60	9,70
	max	3,65	4,15	4,55	5,10	6,15	8,20	10,30
di	min	2,00	2,35	2,60	3,00	3,80	5,10	6,00
	max	2,25	2,65	2,80	3,45	4,20	5,50	6,50
dh	min	6,60	7,50	8,50	9,50	11,50	14,15	17,40
	max	7,00	8,00	9,00	10,00	12,00	14,85	18,20
hh	min	3,25	3,75	4,15	4,55	5,40	6,50	8,20
	max	3,65	4,25	4,65	5,05	5,90	7,50	9,20
p	min	2,02	2,25	2,52	2,79	4,41	5,04	5,94
	max	2,46	2,75	3,08	3,41	5,39	6,16	7,26
ds	min	2,20	2,60	2,80	3,60	4,30	5,70	6,90
	max	2,40	2,80	3,10	3,80	4,50	5,90	7,10
dm	min	2,70	2,90	3,40	3,80	4,80	6,60	7,90
	max	2,80	3,00	3,50	3,90	5,00	6,80	8,10
dh2	min	-	-	-	-	13,50	21,00	24,00
	max					14,50	23,00	26,00
e	min	2,35	2,70	3,00	3,35	4,05	5,50	6,85
	max	2,55	2,90	3,30	3,65	4,25	5,70	7,05
h4K	min	2,40	2,40	2,90	2,90	2,90	3,40	3,90
	max	2,60	2,60	3,10	3,10	3,10	3,60	4,10
TX	torx size	TX20	TX20	TX25	TX25	TX30	TX40	TX40

All specifications in mm.

	ℓg +1,0/-1,0						
L +0/-2,0	Ø3,5	Ø4,0	Ø4,5	Ø5,0	Ø6,0	Ø8,0	Ø10,0
30	18	18	-	-	-	-	-
40	24	24	24	24	28	-	-
45	24	24	24	-	-	-	-
50	30	30	30	30	30	-	-
60	-	36	36	36	36	-	-
70	-	42	42	42	42	-	-
80	-	48	48	48	48	50	50
90	-	-	-	54	54	55	-
100	-	-	-	60	60	60	60
110	-	-	-	-	60	-	-
120	-	-	-	70	70	70	70
130	-	-	-	-	70	-	-
140	-	-	-	-	70	70	70
150	-	-	-	-	70	-	-
160	-	-	-	-	70	70	70
180	-	-	-	-	80	80	80
200	-	-	-	-	90	90	90
220	-	-	-	-	90	100	100
+20 mm steps	-	-	-	-	90	100	100
300/500/400*	-	-	-	-	90	100	100

All specifications in mm.
L for d= 6,0/8,0/10,0 mm*

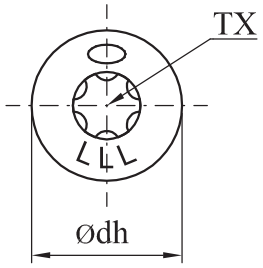

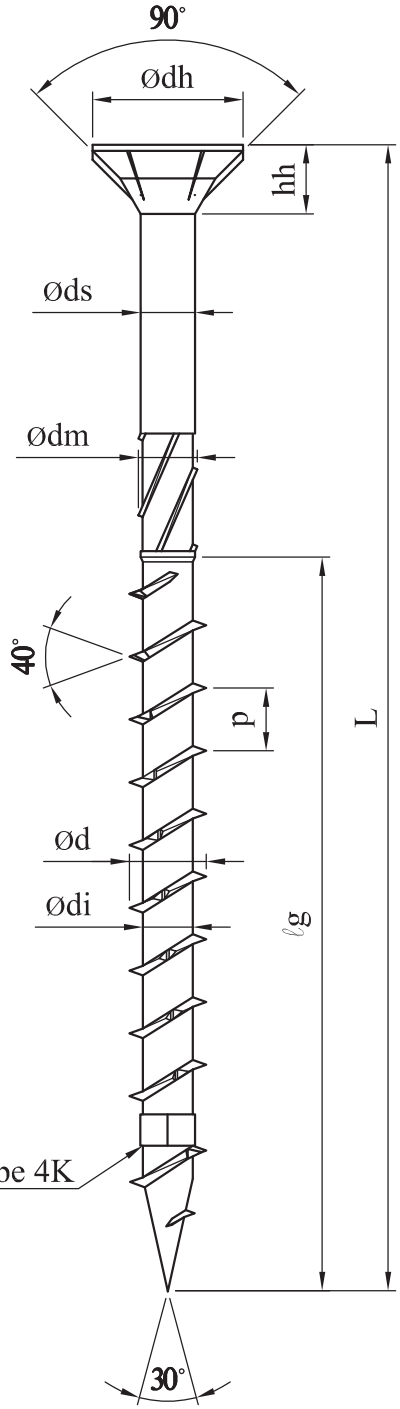

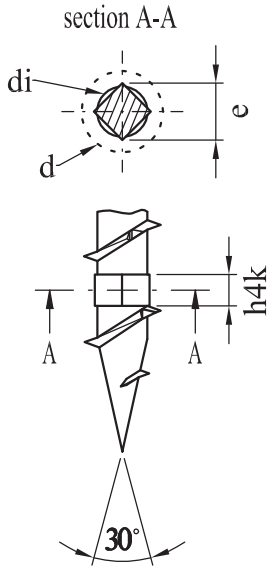

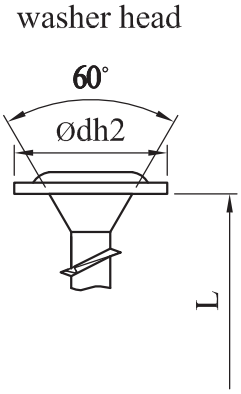

Hobotec, Hapatec, Paneltwistec V4A countersunkhead 90°
carbon steel: SAE 1018, SAE 1022, SAE 10B21
stainless steel hardened: 1.4006
stainless steel unhardened: 1.4401, 1.4567

nominal size		Ø3,5	Ø4,0	Ø4,5	Ø5,0	Ø6,0
d	min	3,50	4,00	4,50	5,00	6,00
	max	3,70	4,20	4,70	5,20	6,20
di	min	2,05	2,40	2,60	3,00	3,60
	max	2,25	2,60	2,80	3,20	3,80
dh	min	6,50	7,50	8,50	9,50	11,50
	max	7,50	8,50	9,50	10,50	12,00
hh	min	3,70	4,20	4,70	5,30	5,60
	max	3,90	4,40	4,90	5,50	5,80
p	min	1,44	1,62	1,80	1,98	2,34
	max	1,76	1,98	2,20	2,42	2,86
ds	min	2,20	2,70	2,80	3,60	3,80
	max	2,50	2,90	3,20	3,80	4,20
dm	min	2,80	3,40	3,80	3,90	4,50
	max	3,00	3,60	4,00	4,10	4,70
dt	min	1,90	2,20	2,40	2,80	3,30
	max	2,10	2,40	2,60	3,00	3,50
ℓt	min	3,30	3,80	4,30	4,80	4,80
	max	3,50	4,00	4,50	5,00	5,00
dc	min	3,30	3,75	5,15	5,75	6,95
	max	3,70	4,25	5,65	6,25	7,45
hh2	min	3,70	4,20	4,70	5,30	5,60
	max	3,90	4,40	4,90	5,50	5,80
TX	torx size	TX10	TX15	TX20	TX25	TX25

All specifications in mm.

	ℓg +1,0/-1,0				
L +0/-1,0	Ø3,5	Ø4,0	Ø4,5	Ø5,0	Ø6,0
25	18	-	-	-	-
30	21	21	21	21	21
35	24	24	24	24	24
40	26	26	26	26	26
45	28	28	28	28	28
50	30	30	30	30	30
60	-	36	36	36	36
70	-	42	42	42	42
80	-	48	48	48	48
90	-	-	-	54	54
100	-	-	-	60	60
110	-	-	-	60	60
120	-	-	-	60	60
130	-	-	-	-	70
140	-	-	-	-	70
150	-	-	-	-	70
160	-	-	-	-	70
180	-	-	-	-	70
200	-	-	-	-	70
+20 mm steps	-	-	-	-	70
300	-	-	-	-	70

All specifications in mm.

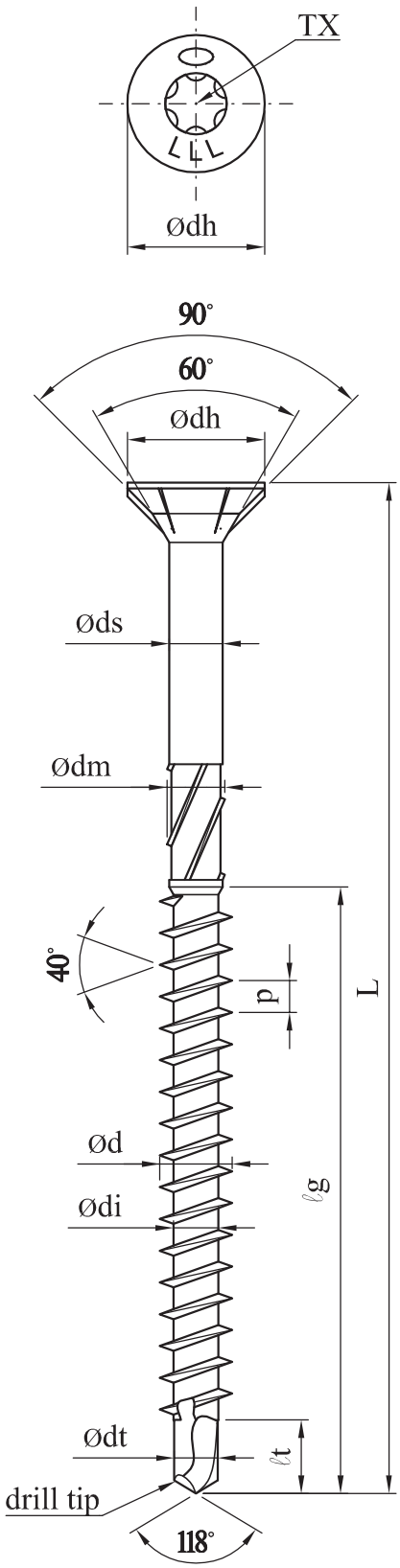

head type c

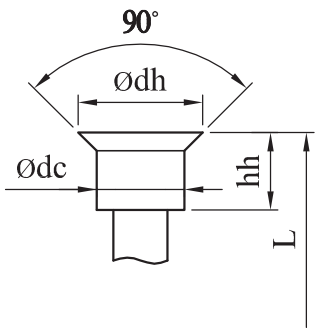

tip type N

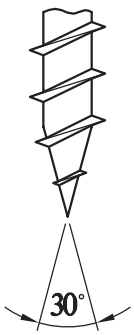

tip type 17

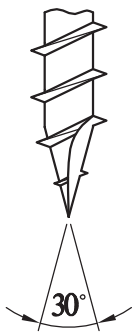

Hobotec, Hapatec, Paneltwistec V4A countersunkhead 60°
carbon steel: SAE 1018, SAE 1022, SAE 10B21
stainless steel hardened: 1.4006
stainless steel unhardened: 1.4401, 1.4567

nominal size		Ø3,5	Ø4,0	Ø4,5	Ø5,0	Ø6,0
d	min	3,50	4,00	4,50	5,00	6,00
	max	3,70	4,20	4,70	5,20	6,20
di	min	2,05	2,40	2,60	3,00	3,60
	max	2,25	2,60	2,80	3,20	3,80
dh	min	4,50	5,50	6,00	6,50	10,00
	max	5,50	6,50	8,00	8,50	12,00
hh	min	3,70	4,20	4,70	5,30	5,60
	max	3,90	4,40	4,90	5,50	5,80
p	min	1,44	1,62	1,80	1,98	2,34
	max	1,76	1,98	2,20	2,42	2,86
ds	min	2,20	2,70	2,80	3,60	3,80
	max	2,50	2,90	3,20	3,80	4,20
dm	min	2,80	3,40	3,80	3,90	4,50
	max	3,00	3,60	4,00	4,10	4,70
dt	min	1,90	2,20	2,40	2,80	3,30
	max	2,10	2,40	2,60	3,00	3,50
ℓt	min	3,30	3,80	4,30	4,80	4,80
	max	3,50	4,00	4,50	5,00	5,00
dc	min	3,30	3,75	5,15	5,75	6,95
	max	3,70	4,25	5,65	6,25	7,45
hh2	min	3,70	4,20	4,70	5,30	5,60
	max	3,90	4,40	4,90	5,50	5,80
TX	torx size	TX10	TX15	TX20	TX25	TX25

All specifications in mm.

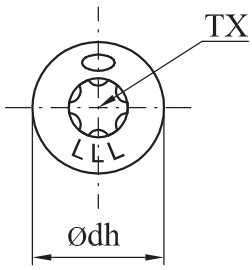

	ℓg +1,0/-1,0				
L +0/-1,0	Ø3,5	Ø4,0	Ø4,5	Ø5,0	Ø6,0
25	18	-	-	-	-
30	21	21	21	21	21
35	24	24	24	24	24
40	26	26	26	26	26
45	28	28	28	28	28
50	30	30	30	30	30
60	-	36	36	36	36
70	-	42	42	42	42
80	-	48	48	48	48
90	-	-	-	54	54
100	-	-	-	60	60
110	-	-	-	60	60
120	-	-	-	60	60
130	-	-	-	-	70
140	-	-	-	-	70
150	-	-	-	-	70
160	-	-	-	-	70
180	-	-	-	-	70
200	-	-	-	-	70
+20 mm steps	-	-	-	-	70
300	-	-	-	-	70

All specifications in mm.

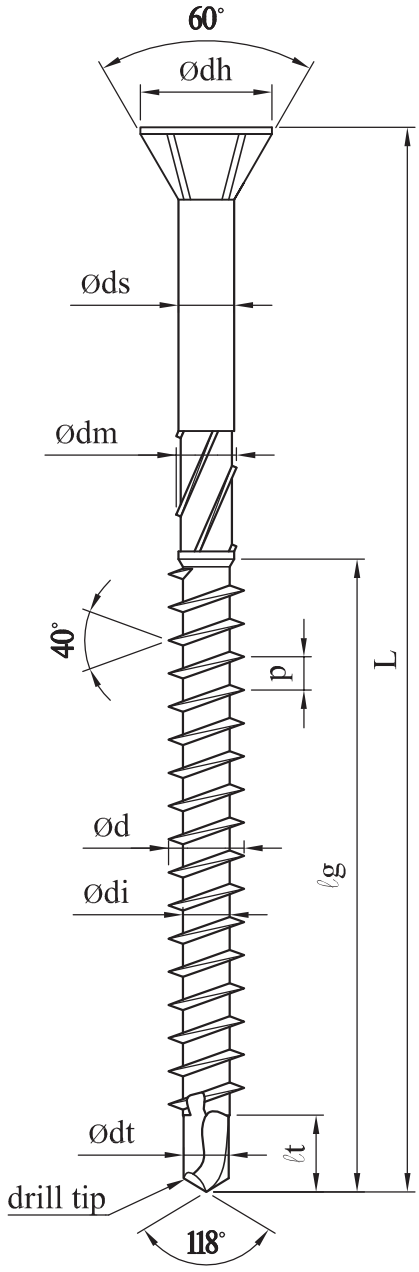

head type c

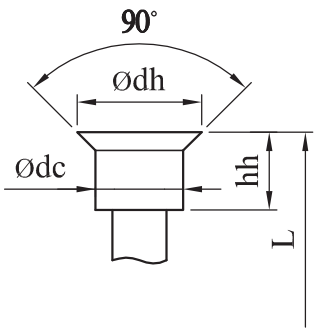

tip type N

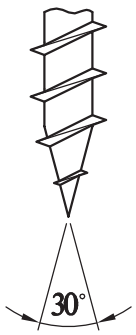

tip type 17

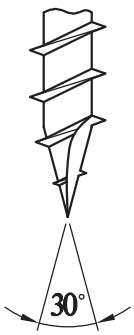

SP ZK
carbon steel: SAE 10B21

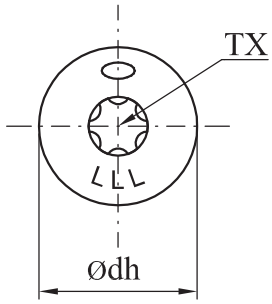

nominal size		Ø6,0	Ø8,0	Ø10,0
d	min	5,85	7,80	9,70
	max	6,15	8,20	10,30
di	min	3,70	5,00	6,00
	max	4,10	5,40	6,50
dh	min	13,00	16,60	20,50
	max	13,80	17,40	21,50
hh	min	3,40	3,80	4,50
	max	3,80	4,20	5,10
p	min	4,41	5,04	5,94
	max	5,39	6,16	7,26
ds	min	4,20	5,60	6,80
	max	4,40	5,80	7,00
dm	min	4,50	6,40	7,70
	max	4,90	6,80	8,10
TX	torx size	TX30	TX40	TX40

All specifications in mm.

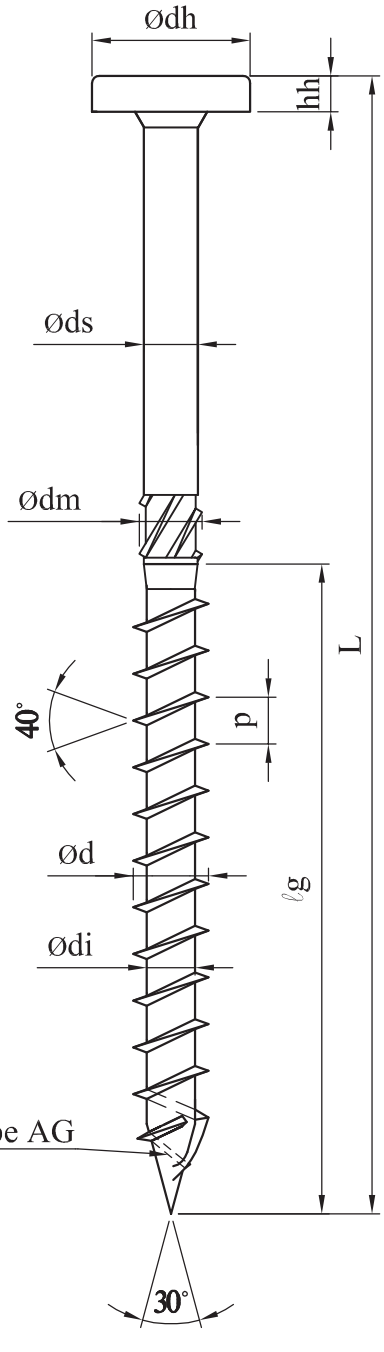

	ℓg +1,0/-1,0		
L +0/-2,0	Ø6,0	Ø8,0	Ø10,0
50	30	-	-
60	36	-	-
70	42	-	-
80	48	50	50
90	54	-	-
100	60	60	60
110	70	-	-
120	70	70	70
130	70	-	-
140	70	80	80
150	70	-	-
160	70	90	90
180	70	100	100
+20 mm steps	70	100	100
300	70	100	100
+20 mm steps	-	100	100
400	-	100	100

All specifications in mm.

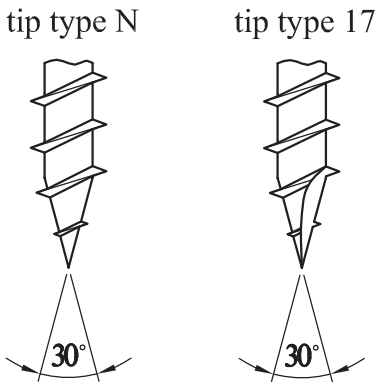

Annex B
Minimum distances and spacing

Axially loaded screws
Single configuration

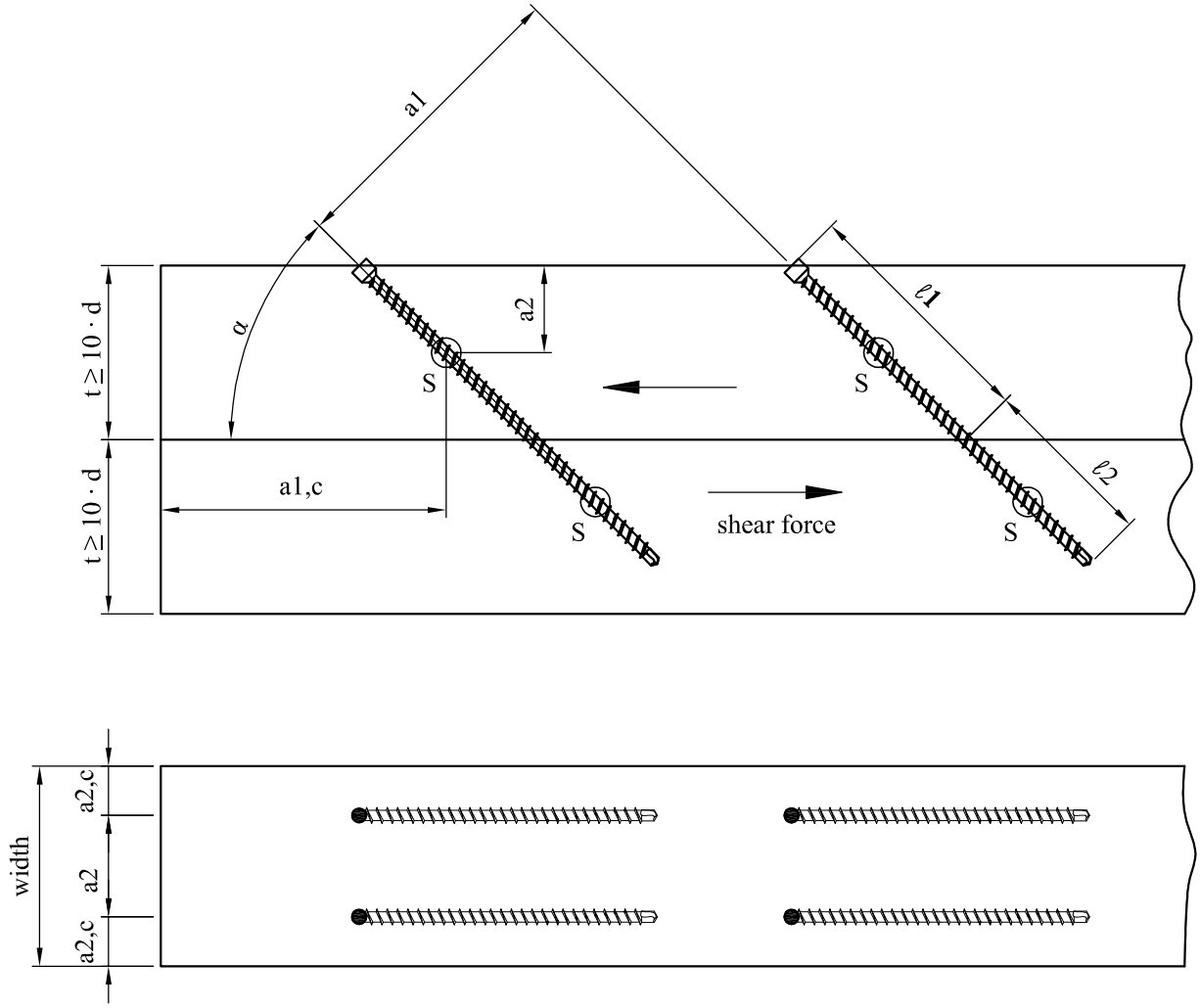

S = centroid of the part of the screw in the timber

$a1 \geq 5 \cdot d$
$a2 \geq 5 \cdot d$
$a1,c \geq 10 \cdot d$ ($5 \cdot d$ for "KonstruX" screws with drill tip)
$a2,c \geq 4 \cdot d$ ($3 \cdot d$ for "KonstruX" screws with drill tip)
$a1 \cdot a2 \geq 25 \cdot d^2$

Minimum distances and spacing, see also 4.2
Minimum timber thickness $t = 10 \cdot d$, see also 4.2
Minimum timber width $w = \max\{8 \cdot d; 60\ mm\}$, see also 4.2
$30° \leq \alpha \leq 90°$, see also 2.1

Axially loaded screws
Crosswise configuration

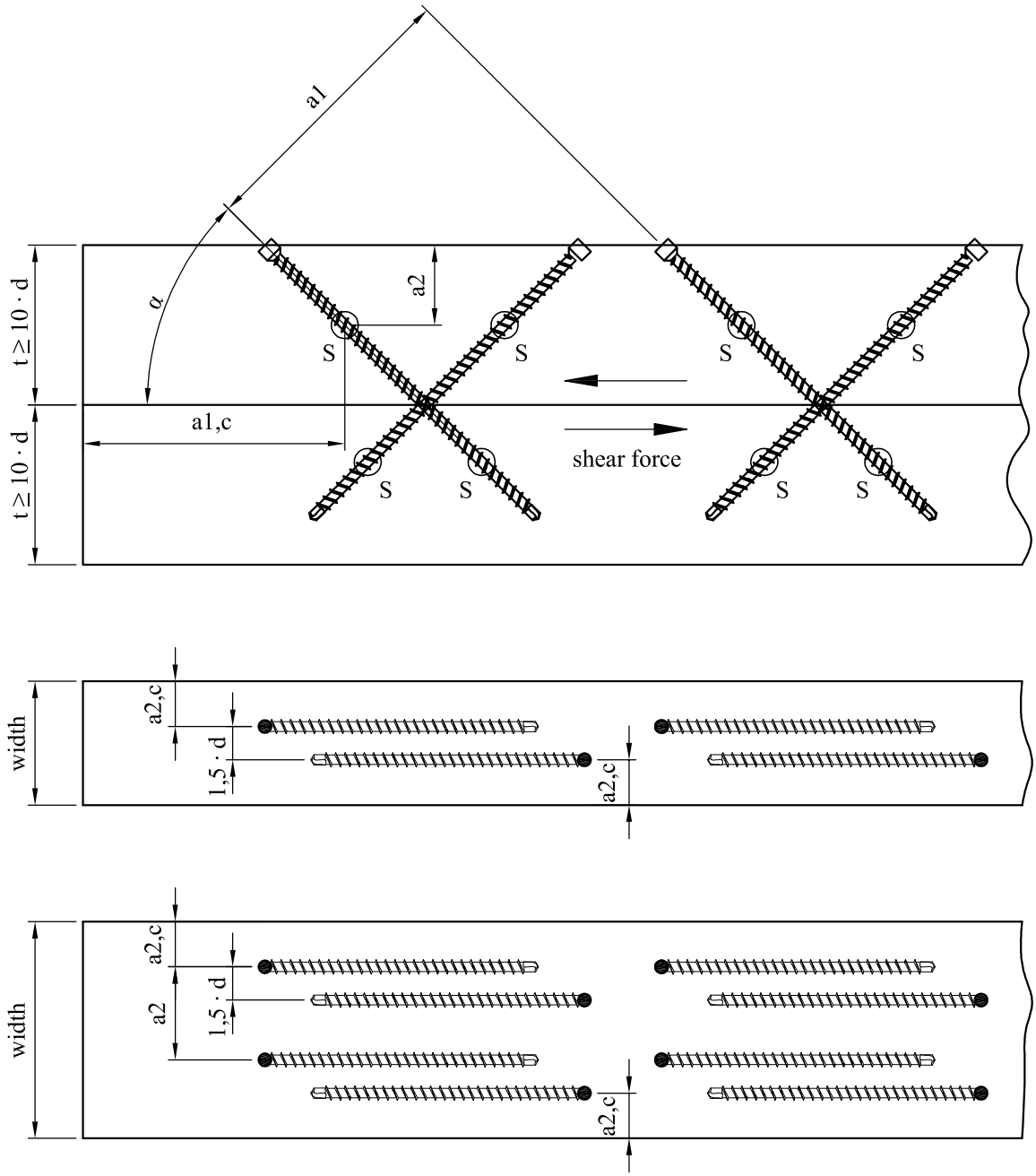

S = centroid of the part of the screw in the timber

$a1 \geq 5 \cdot d$
$a2 \geq 5 \cdot d$
$a1,c \geq 10 \cdot d$ ($5 \cdot d$ for "KonstruX" screws with drill tip)
$a2,c \geq 4 \cdot d$ ($3 \cdot d$ for "KonstruX" screws with drill tip)
$a1 \cdot a2 \geq 25 \cdot d^2$

Minimum spacing between crossing screws = $1,5 \cdot d$

Minimum distances and spacing, see also 4.2
Minimum timber thickness $t = 10 \cdot d$, see also 4.2
Minimum timber width $w = \max\ \{8 \cdot d; 60\ mm\}$, see also 4.2
$30° \leq \alpha \leq 90°$, see also 2.1

Annex C
Compression reinforcement

Reinforced centre-bearing

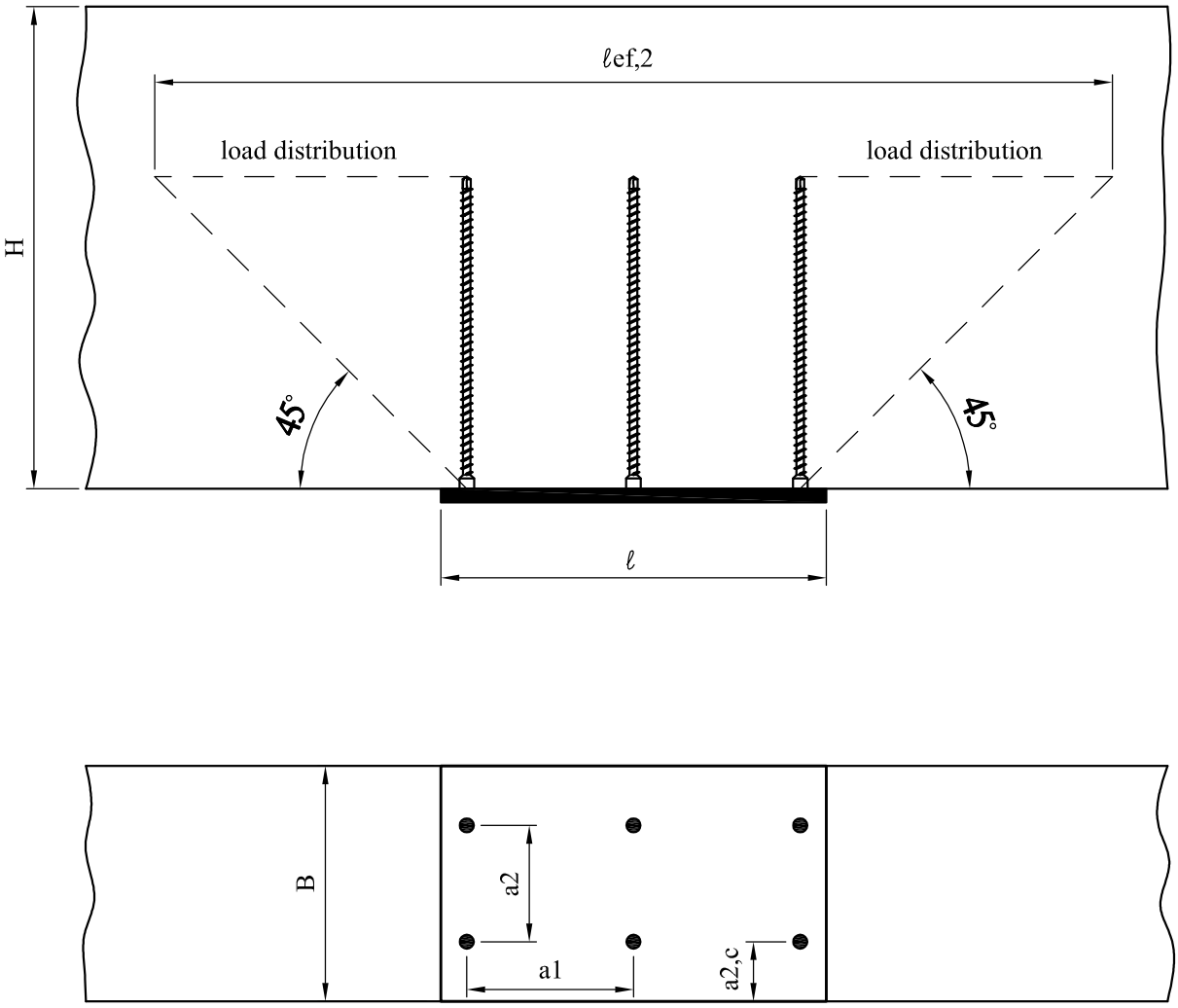

H	component height [mm] 0
B	bearing width [mm]
ℓef	point side penetration length [mm]
ℓef,2	effective distribution length in the plane of the screw tips [mm]
	$= 2 \cdot \ell ef + (n_0 - 1) \cdot a1$ for centre-bearings

Reinforced centre-bearing

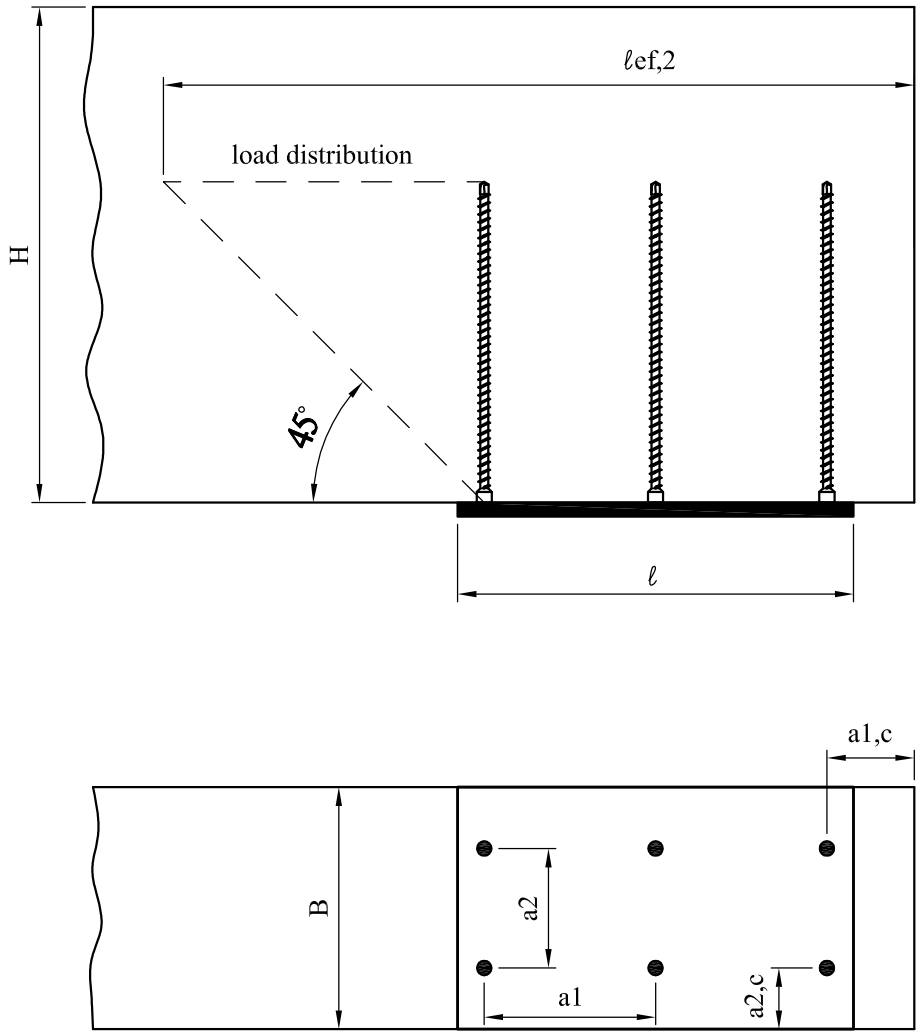

H	component height [mm]
B	bearing width [mm]
ℓef	point side penetration length [mm]
ℓef,2	effective distribution length in the plane of the screw tips [mm]
	$= \ell ef + (n_0 - 1) \cdot a1 + \min(\ell ef; a1,c)$ for end-bearings

Annex D
Thermal insulation on rafters with parallel inclined screws

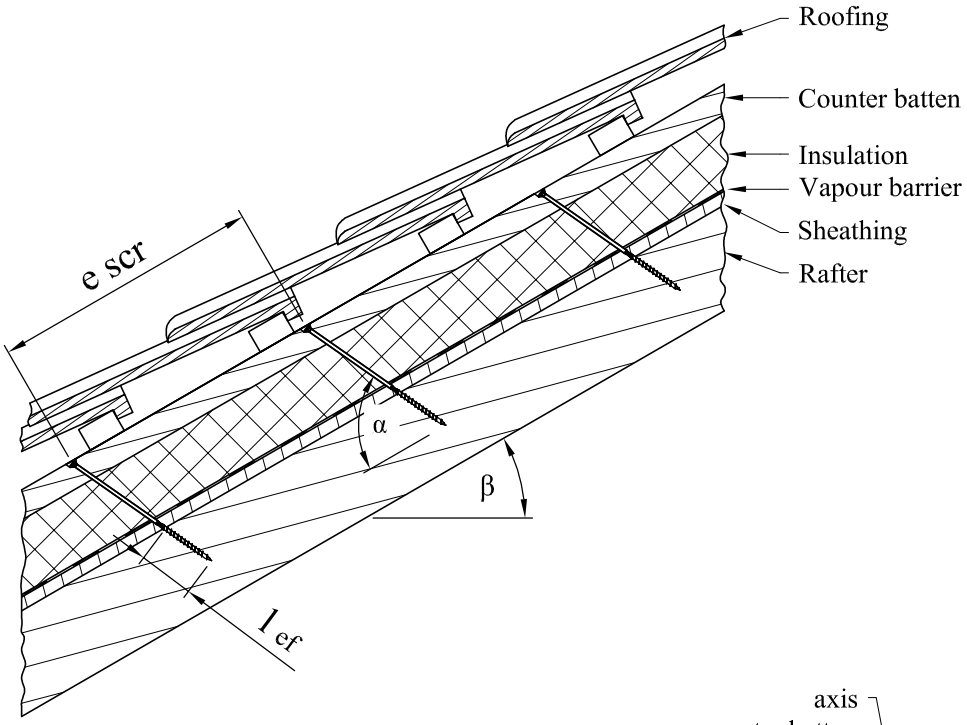

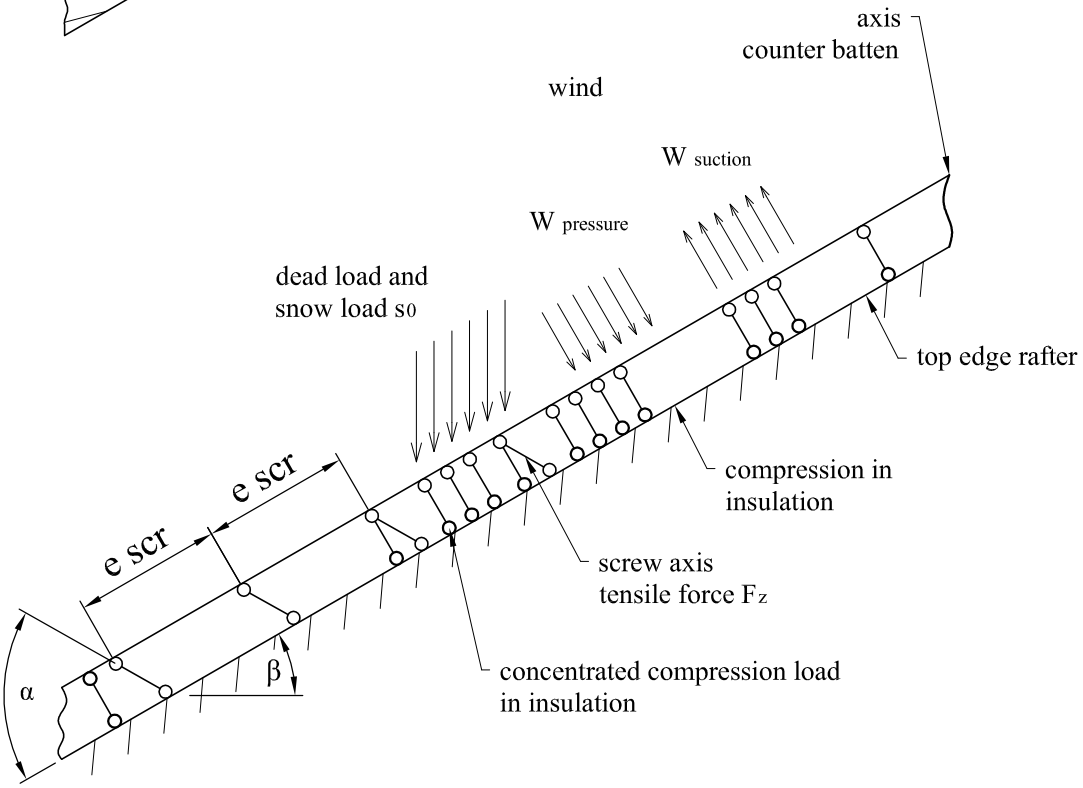

α = angle between screw axis and rafter axis
β = roof pitch
e scr = screws distance
lef = penetration length in the rafter

Thermal insulation on rafters with alternatively inclined screws

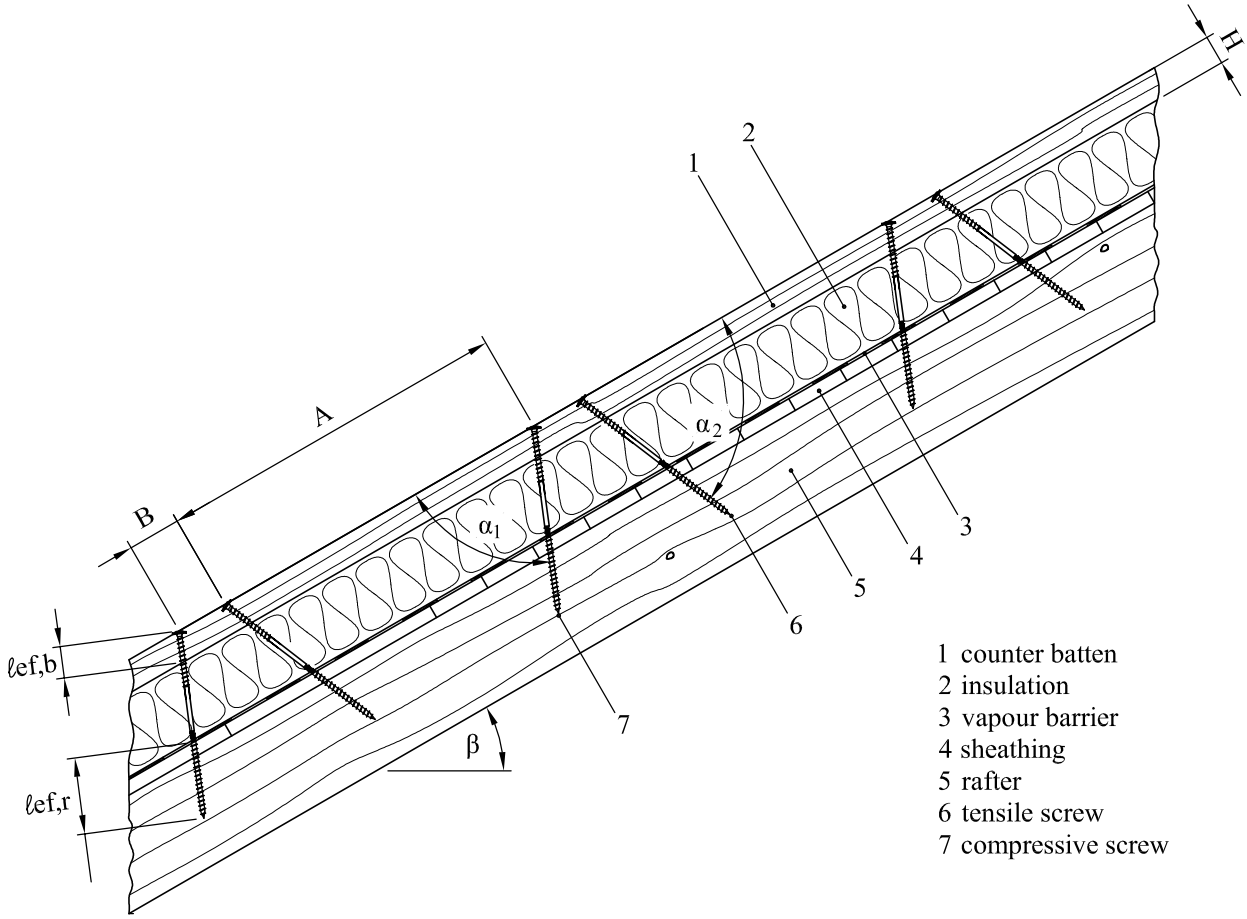

$30° \leq \alpha_1 \leq 90°$, angle between grain and compressive screw axis
$30° \leq \alpha_2 \leq 90°$, angle between grain and tensile screw axis

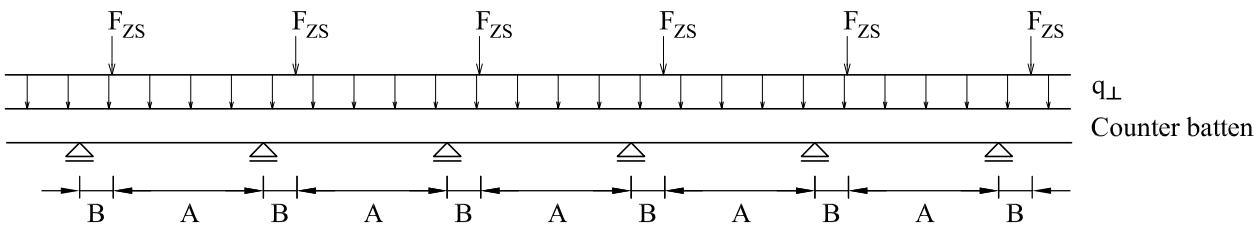

compressive screw: $$F_{c,Ed} = (A + B) \cdot \left(- \frac{q_{II}}{\cos\alpha_1 + \sin\alpha_1 / \tan\alpha_2} - \frac{q_{\perp} \cdot \sin(90° - \alpha_2)}{\sin(\alpha_1 + \alpha_2)} \right)$$

tensile screw: $$F_{t,Ed} = (A + B) \cdot \left(\frac{q_{II}}{\cos\alpha_2 + \sin\alpha_2 / \tan\alpha_1} - \frac{q_{\perp} \cdot \sin(90° - \alpha_1)}{\sin(\alpha_1 + \alpha_2)} \right)$$

concentrated load: $$F_{ZS,Ed} = (A + B) \cdot \left(\frac{q_{II}}{1 / \tan\alpha_1 + 1 / \tan\alpha_2} - \frac{q_{\perp} \cdot \sin(90° - \alpha_1) \cdot \sin\alpha_2}{\sin(\alpha_1 + \alpha_2)} \right)$$

where:
q_{II} constant line load parallel to batten
$q_{\perp}$ constant line load perpendicular to batten
α_1 angle between compressive screw axis and grain direction
α_2 angle between tensile screw axis and grain direction